SE2726H Outline Dimension
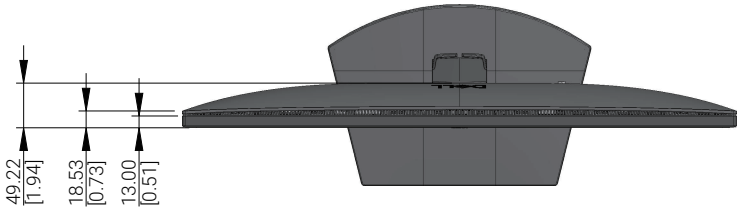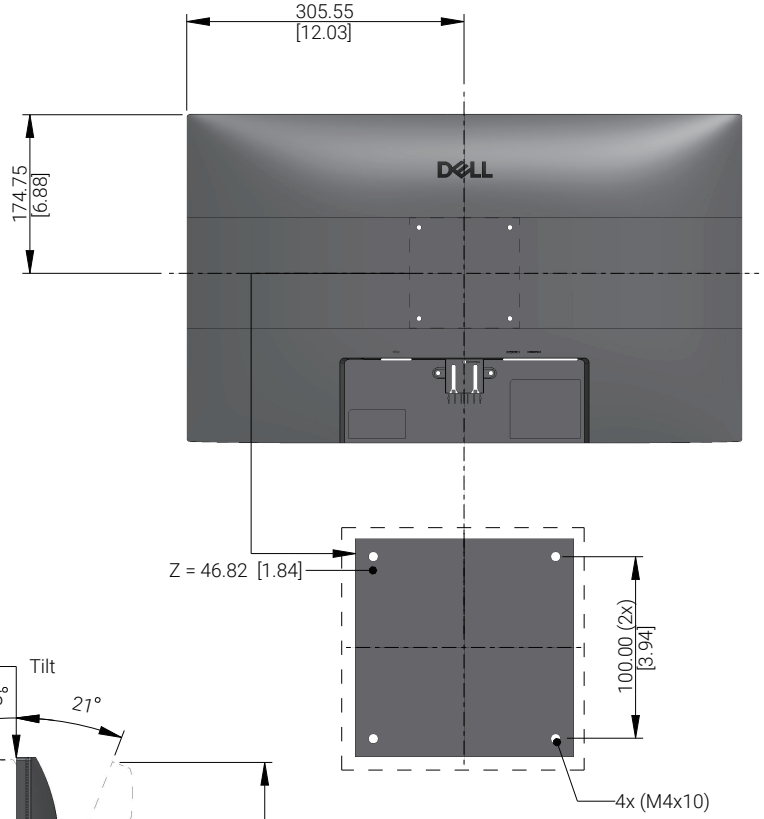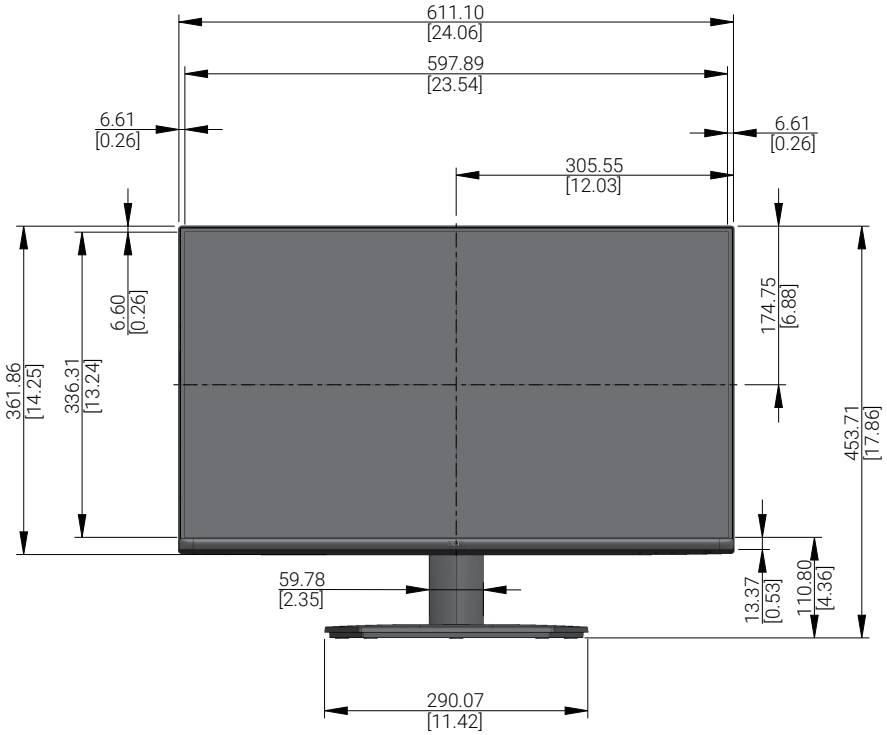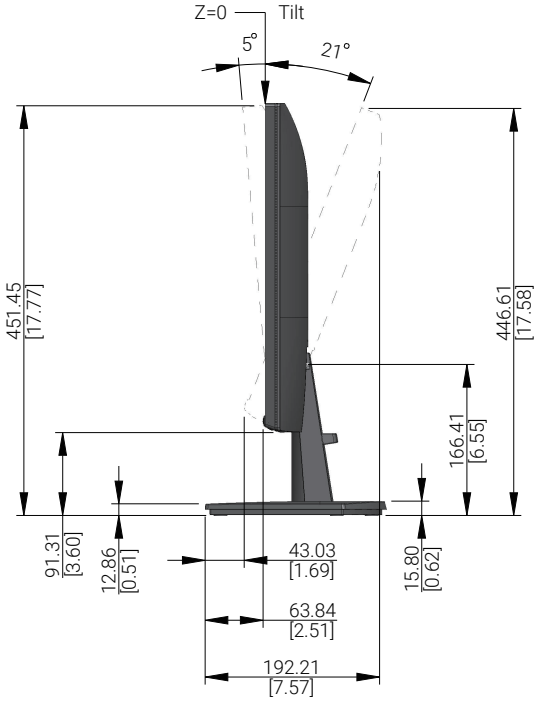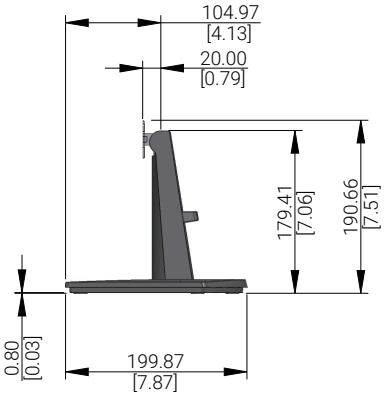
Unit : mm [inch]
Dimension : Nominal
Drawing : Not to scale