Lenovo

ThinkVision

ThinkVision P27UD-40
User Guide

Machine Types: 64CE

Product numbers

C26270UP0

64CEGAR2WW

First Edition (June 2026)

© Copyright Lenovo 2026.
LENOVO products, data, computer software, and services have been developed exclusively at private expense and are sold to governmental entities as commercial items as defined by 48 C.F.R. 2.101 with limited and restricted rights to use, reproduction and disclosure.

LIMITED AND RESTRICTED RIGHTS NOTICE: If products, data, computer software, or services are delivered pursuant a General Services Administration "GSA" contract, use, reproduction, or disclosure is subject to restrictions set forth in Contract No. GS-35F-05925.

Contents

Safety information ..... **iii**
General Safety guidelines iii

Chapter 1. Getting started **1-1**
Shipping contents 1-1
Notice for use 1-1
Product overview 1-2
Types of adjustments 1-2
Tilt 1-2
Swivel 1-2
Height adjustment 1-3
Monitor pivot 1-3
Monitor controls 1-4
Cable lock slot 1-4
Setting up your monitor 1-5
Connecting and turning on your monitor 1-5
Registering your option 1-12
KVM 1-13
DP Power Saving Mode 1-14

Chapter 2. Adjusting and using your monitor **2-1**
Comfort and accessibility 2-1
Arranging your work area 2-1
Positioning your monitor 2-1
Quick tips for healthy work habits 2-2
Accessibility information 2-2
Adjusting your monitor image 2-3
Using the direct access controls 2-3
Using the On-Screen Display (OSD) controls 2-4
Selecting a supported display mode 2-11
Understanding power management 2-12
Power Management Modes 2-12
Caring for your monitor 2-13
Detaching the monitor base and stand 2-13
Wall Mounting (Optional) 2-13

Chapter 3. Reference information **3-1**
Monitor specifications 3-1
Troubleshooting 3-3
Manually installing the monitor driver 3-5
Getting further help 3-5
Service information 3-6
Customer responsibilities 3-6
Service parts 3-6

Appendix A. Service and Support **A-1**
Registering your option A-1
Online technical support A-1
Telephone technical support A-1

Appendix B. Notices **B-1**
Recycling information B-3
Trademarks B-3
Power cords and power adapters B-4

Safety information

General Safety guidelines

For tips to help you use your computer safely, go to:
http://www.lenovo.com/safety

Before installing this product, read the Safety Information.

Avant d'installer ce produit, lisez les consignes de sécurité.

Vor der Installation dieses Produkts die Sicherheitshinweise lesen.

Πριν εγκαταστήσετε το προϊόν αυτό, διαβάστε τις πληροφορίες ασφάλειας (safety information).

לפני שתתקינו מוצר זה, קראו את הוראות הבטיחות.

A termék telepítése előtt olvassa el a Biztonsági előírásokat!

Prima di installare questo prodotto, leggere le Informazioni sulla Sicurezza

Antes de instalar este produto, leia as Informações de Segurança.

Läs säkerhetsinformationen innan du installerar den här produkten.

Prije instalacije ovog produkta obavezno pročitajte Sigurnosne Upute.

Les sikkerhetsinformasjonen (Safety Information) før du installerer dette produktet.

Przed zainstalowaniem tego produktu, należy zapoznać się
z książką "Informacje dotyczące bezpieczeństwa" (Safety Information).

Пред да се инсталира овој продукт, прочитајте информацијата за безбедност.

Pred inštaláciou tohto zariadenia si peèítaje Bezpeènostné predpisy.

Pred namestitvijo tega proizvoda preberite Varnostne informacije.

Ennen kuin asennat t m n tuotteen, lue turvaohjeet kohdasta Safety Information.

Před instalací tohoto produktu si pročtěte Bezpečnostní informace.

在安装本产品之前，请仔细阅读 Safety Information(安全信息)。

安裝本產品之前，請先閱讀「安全資訊」。

يجب قراءة إرشادات السلامة قبل تشغيل هذا المنتج

Læs sikkerhedsforskrifterne, før du installerer dette produkt.

製品の設置の前に、安全情報をお読みください。

본 제품을 설치하기 전에 안전 정보를 읽으십시오.

Antes de instalar este producto lea la información de seguridad.

Antes de instalar este produto, leia as Informações de Segurança.

Перед установкой продукта прочтите инструкции по технике безопасности.

Lees voordat u dit product installeert eerst de veiligheidsvoorschriften.

HDMI™
HIGH-DEFINITION MULTIMEDIA INTERFACE

TCO Certified

A third-party certification according to ISO 14024

Toward sustainable IT products

Say hello to a more sustainable product

IT products are associated with a wide range of sustainability risks throughout their life cycle. Human rights violations are common in the factories. Harmful substances are used both in products and their manufacture. Products can often have a short lifespan because of poor ergonomics, low quality and when they are not able to be repaired or upgraded.

This product is a better choice. It meets all the criteria in TCO Certified, the world's most comprehensive sustainability certification for IT products. Thank you for making a responsible product choice, that help drive progress towards a more sustainable future!

Criteria in TCO Certified have a life-cycle perspective and balance environmental and social responsibility. Conformity is verified by independent and approved verifiers that specialize in IT products, social responsibility or other sustainability issues. Verification is done both before and after the certificate is issued, covering the entire validity period. The process also includes ensuring that corrective actions are implemented in all cases of factory non-conformities. And last but not least, to make sure that the certification and independent verification is accurate, both TCO Certified and the verifiers are reviewed regularly.

Want to know more?

Read information about TCO Certified, full criteria documents, news and updates at **tcocertified.com**. On the website you'll also find our Product Finder, which presents a complete, searchable listing of certified products.

A third-party certification according to ISO 14024

Toward sustainable IT products

Say hello to a more sustainable product

IT products are associated with a wide range of sustainability risks throughout their life cycle. Human rights violations occur in the supply chain. Harmful substances are used both in products and their manufacture. Products can often have a short lifespan because of poor ergonomics, low quality and when they are not able to be repaired or upgraded.

This product is a better choice. It meets all the criteria in TCO Certified, the world's most comprehensive sustainability certification for IT products. Additionally, it fulfills the requirements of TCO Certified Edge, the supplemental certification that recognizes leading-edge products that exceed typical performance in a particular sustainability attribute. At our Product Finder **(tcocertified.com/product-finder)** you can find out which TCO Certified Edge criterion or criteria this product meets.

Criteria in TCO Certified have a life-cycle perspective and balance environmental and social responsibility. Compliance is verified by independent verification organizations that specialize in IT products, social responsibility or other sustainability issues. Verification is done both before and after the certificate is issued, covering the entire validity period. The process also includes ensuring that corrective actions are implemented in all cases of factory non-conformities.

Thank you for making a responsible product choice, that help drive progress towards a more sustainable future!

Want to know more?

Read information about TCO Certified, full criteria documents, news and updates at **tcocertified.com.** On the website you'll also find our Product Finder, which presents a complete, searchable listing of certified products.

Chapter 1. Getting started

This User's Guide contains detailed information on the your Flat Panel Monitor. For a quick overview, please see the Setup Poster that was shipped with your monitor. P27UD-40 supports Lenovo Accessories and Display Manager - **ThinkColour**.

Shipping contents

The product package should include the following items:

- *Flat Panel Monitor*
- *Information Flyer*
- *Stand*
- *Base*
- *Power Cord*
- *USB 3.0 A-B Cable*
- *TBT4 Cable*
- *Display Port Cable*

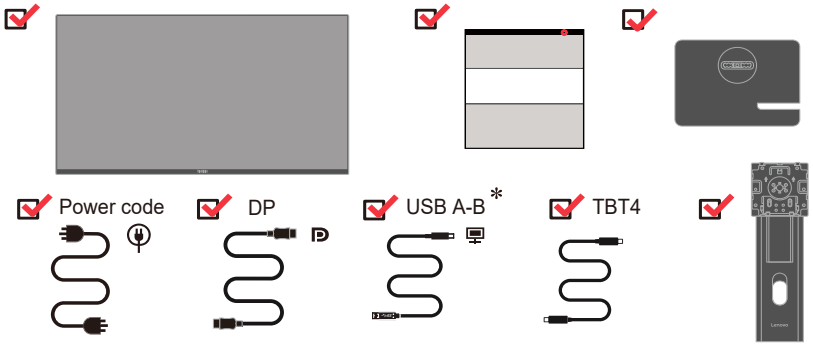

*: Depending on many factors such as the processing capability of peripheral devices, file attributes, and other factors related to system configuration and operating environments, the actual transfer rate using the various USB connectors on this device will vary and is typically slower than the data ratesas defined by the respective USB specifications: - 5 Gbit/s for USB 3.1 Gen 1; 10 Gbit/s for USB 3.1 Gen 2.

Notice for use

To set up your monitor, please see the illustrations below.

Note: Do not touch the monitor within the screen area. The screen area is glass and can be damaged by rough handling or excessive pressure.

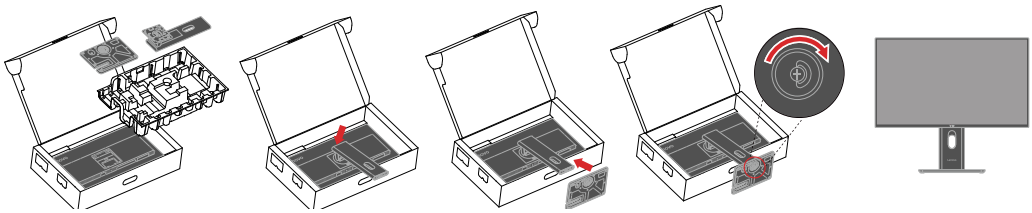

1. Take out the Top cushion and accessories.
2. Mounting the stand to monitor's recess.
3. Insert the base towards the stand and tighten the thumbscrew.
4. Stand up the monitor with both hands carefully.

Note: To install a VESA mount, please see "Wall Mounting (Optional)"on page 2-13.

Product overview

This section will provide information on adjusting monitor positions, setting user controls, and using the cable lock slot.

Types of adjustments

Tilt

Please see the illustration below for an example of the tilt range.

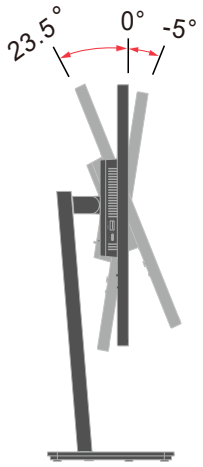

Swivel

With the built-in pedestal, you can tilt and swivel the monitor for the most comfortable viewing angle.

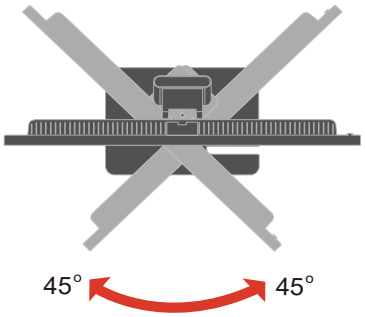

Height adjustment

For height adjustment, user needs to press down or lift up the monitor.

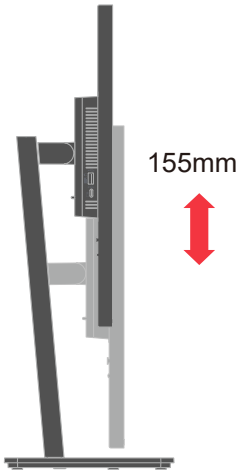

Monitor pivot

- Adjust the screen position before rotating the monitor screen. (Make sure that the monitor screen ascent to its highest point, and it inclines backward at 23.5°.)

- then rotate clockwise /counterclockwise until the monitor stops at 90°.

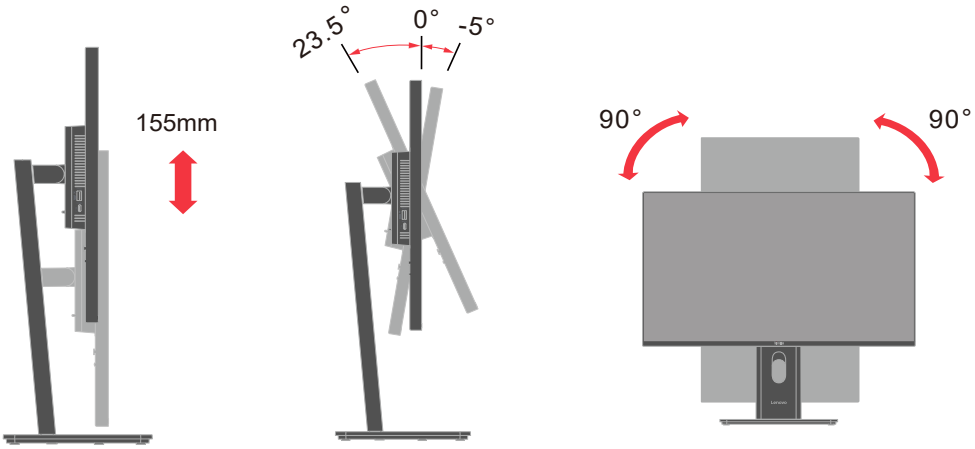

Monitor controls

Your monitor has controls on the back which are used to adjust the display.

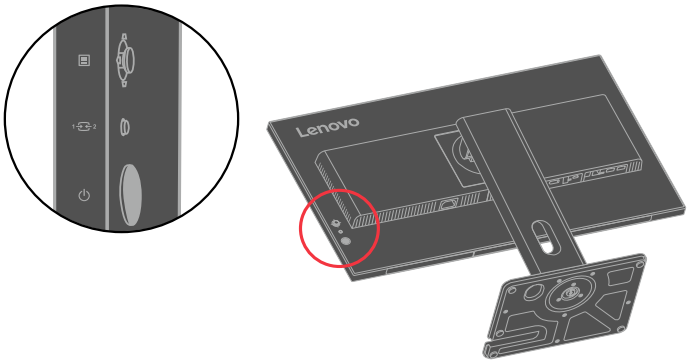

For information on how to utilize these keypad controls, please see “Adjusting your monitor image”on page 2-3.

Cable lock slot

Your monitor is equipped with a cable lock slot located on the rear of your monitor .

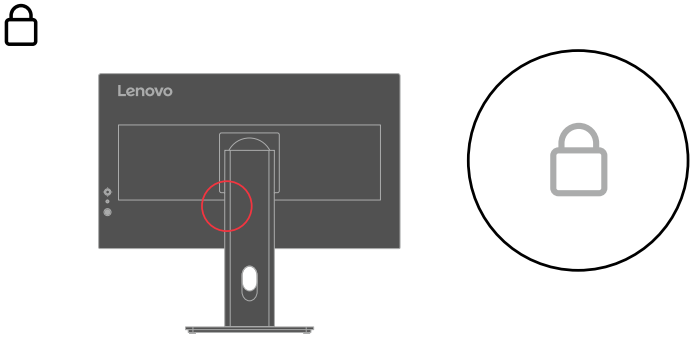

Setting up your monitor

This section provides information on how to set up your monitor.

Connecting and turning on your monitor

Note: Be sure to read the Safety information on page iii before carrying out this procedure.

1. Power off your computer and all attached devices, and unplug the computer power cord.

Note: The type of plug & Socket shown here are for illustration only.

2. Connect the cables according to below icon indication.

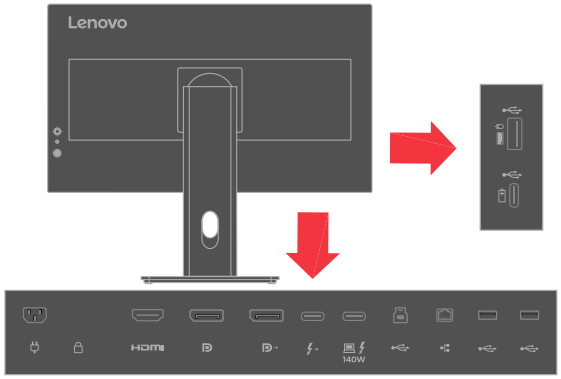

3. For computer in HDMI connecting.

   Note: Lenovo recommends that customers who require to use the HDMI input on their monitor purchase the “Lenovo HDMI to HDMI cable OB47070” www.lenovo.com/support/monitor accessories.

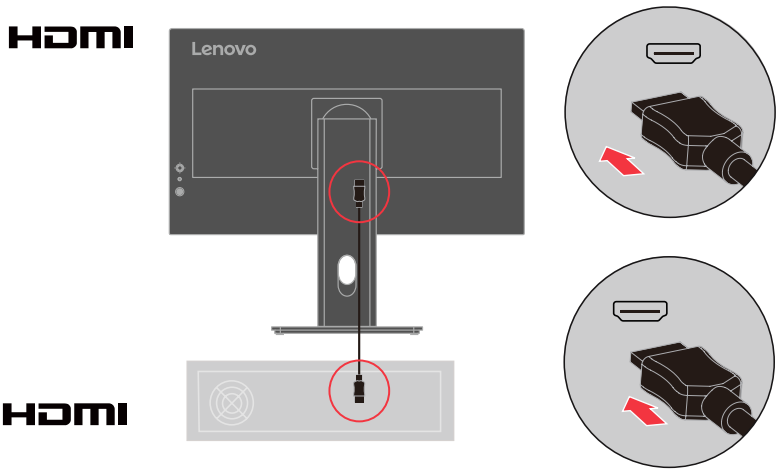

4. For computer in DisplayPort connecting.

   Note : Lenovo recommends that customers who require to use the DP Cable on their monitor purchase the “Lenovo DisplayPort to DisplayPort Cable 0A36537” www.lenovo.com/support/monitoraccessories.

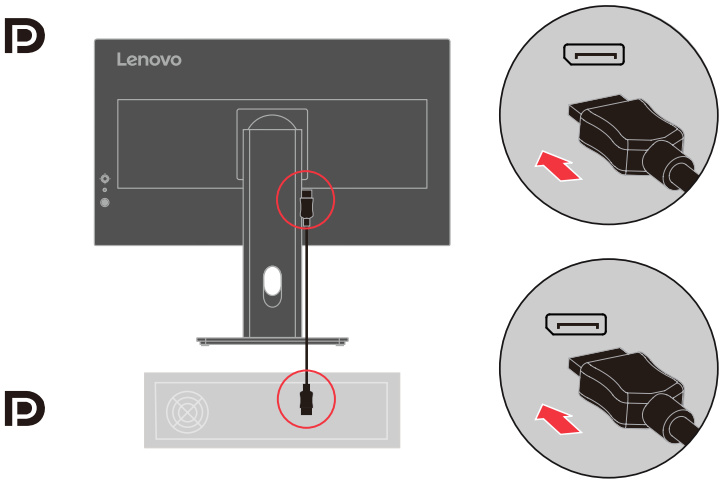

5. Connect one end of the DP cable to the DP input on the back of another monitor, and the other end to the DP output connector (for daisy chain) on the monitor.

   Note : Lenovo recommends that customers who require to use the Display Port input on their monitor purchase the “ Lenovo Display Port to Display Port Cable 0A36537 ”.

   www.lenovo.com/support/monitoraccessories.

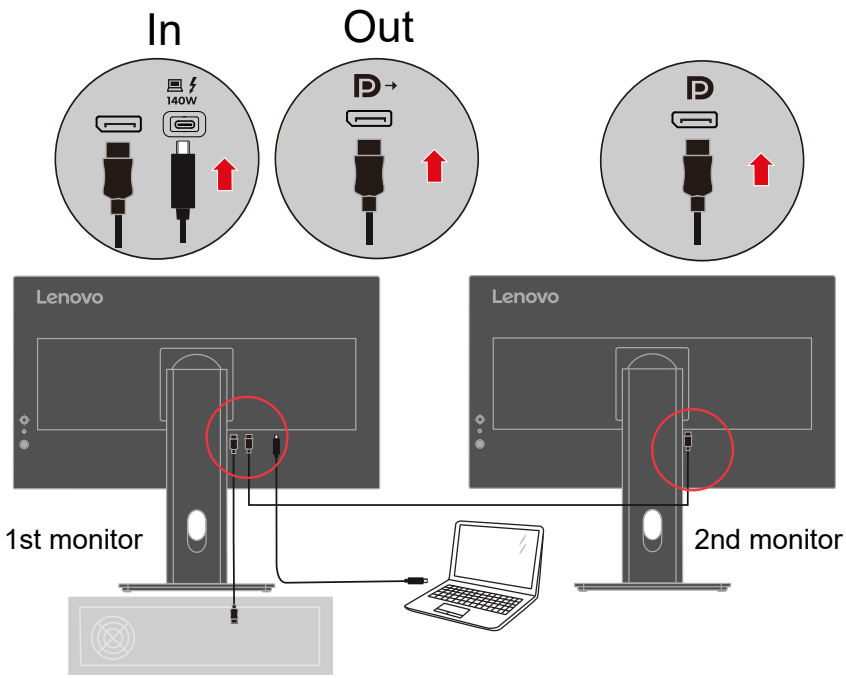

6. Connect to your computer using the Thunderbolt™ cable.

   The Thunderbolt™ 4 upstream offer the fastest transfer rate (USB 4 40Gbps), TBT mode and the alternate mode with DP 1.4 support the following, and PD 28 V/5 A, 20V/4.8A, 15 V/3 A, 9 V/3 A, 5 V/3 A.
   Maximum resolution of 3840 x 2160 at 120 Hz
   The Thunderbolt™ 4 upstream power is more than 100W, the connected equipment and accessory cables should have fire enclosure of V1 level or higher and VW-1 rating wire.
   This model will feature Thunderbolt™ 4.0 technology and will have a 140W power delivery, it is recommended for use the following Lenovo products that meet the fire enclosures.

   Note: Thunderbolt™ 4 upstream is not supported on Windows versions that are prior to Windows 10.

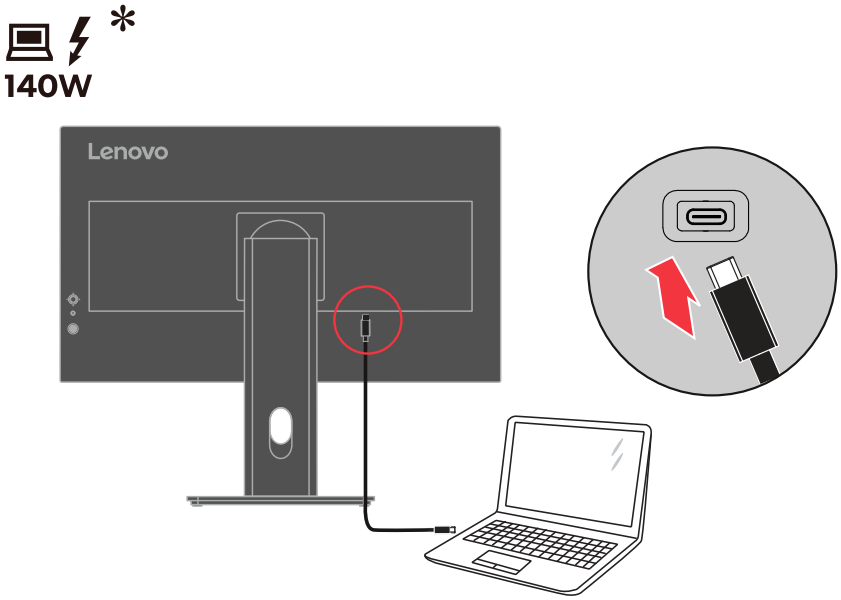

WARNING: The Lenovo 27'' 4K Monitor-P27UD-40 supports USB Type-C Power Delivery 3.1 specification and can provide a maximum output of up to 140 W. For safety consideration, this USB Type-C port must be connected to the approved products with the inbox USB Type-C cable. For the list of the approved products, refer the products compatible with USB Type-C Power Delivery 3.1 (Extended Power Range 140W) Tech sheet at https://support.lenovo.com/solutions/ACC500306.

If there are any * tag, you can consult the comments on page 1-1.

7. Thunderbolt™ 4 downstream port only suitable for video output under Daisy chain, Connecting the monitor for TBT daisy chain.

   Note:
   1) Thunderbolt™ 4 up to 40Gbs bandwidth;
   2)The highest power output up to 15W;
   3) USB-C downstream port supports 5V/3A.

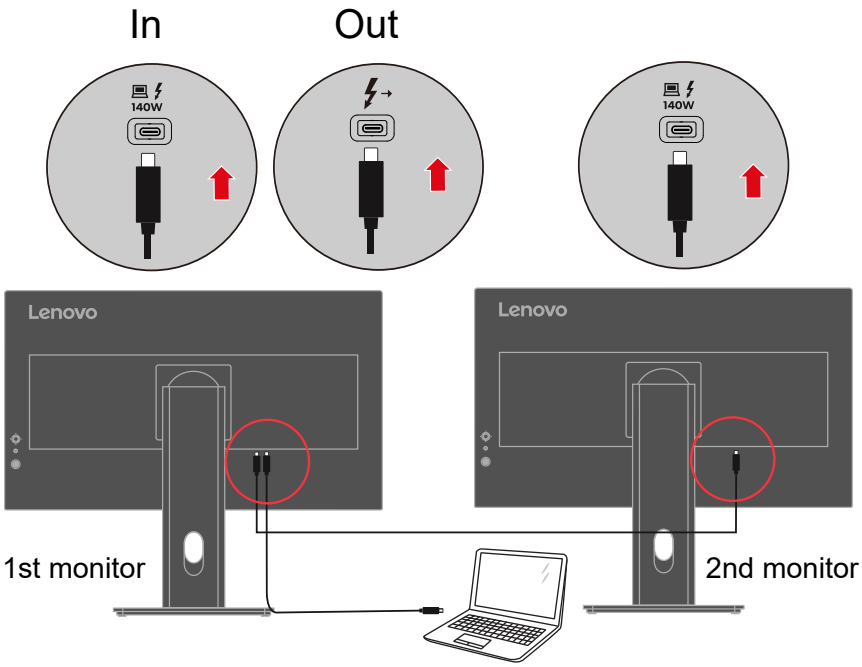

8. For computer in USB type C connecting.

   Note: USB type C port 5V/3A

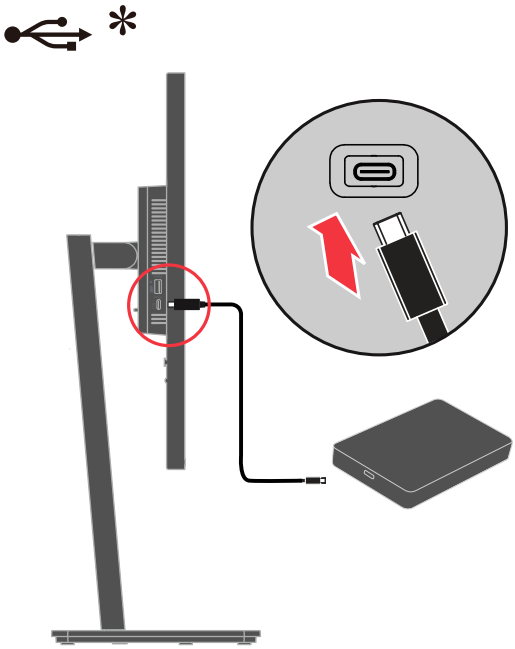

If there are any * tag, you can consult the comments on page 1-1.

9. For computer in USB A-B connecting.

   Note: Upstream port, no current output.

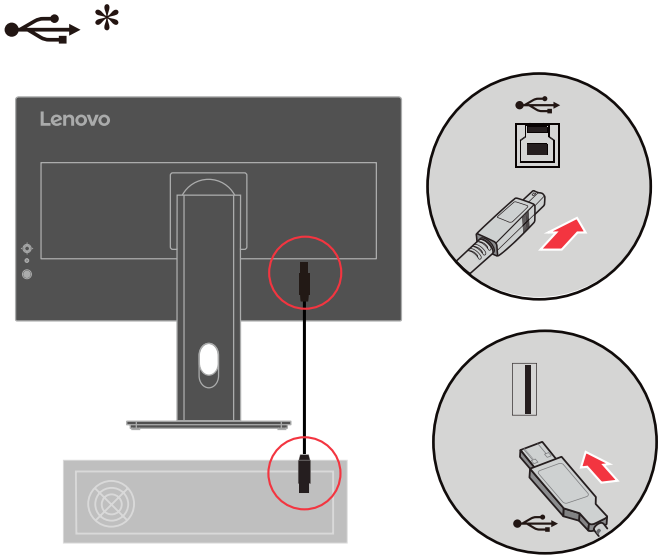

10. Connect one end of the USB cable to the USB downstream terminal of the monitor, and connect the other end of the USB cable to an appropriate USB port on your device.

    Note: The USB downstream port does not provide power while the monitor switch is off.
    USBA port below, 5V/0.9A
    Right USBA port, 5V/0.9A
    Upper USBA BC1.2 port, 5V/2.4A

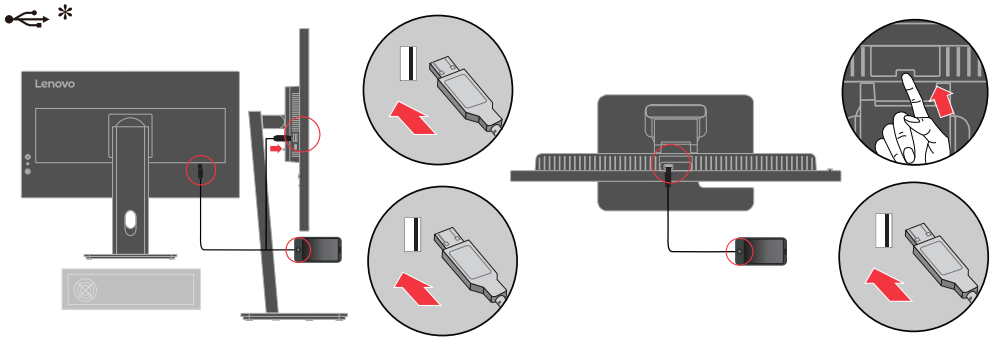

If there are any * tag, you can consult the comments on page 1-1.

11. Connect one end of the network cable connector to the Ethernet interface of the monitor and the other end to the router.

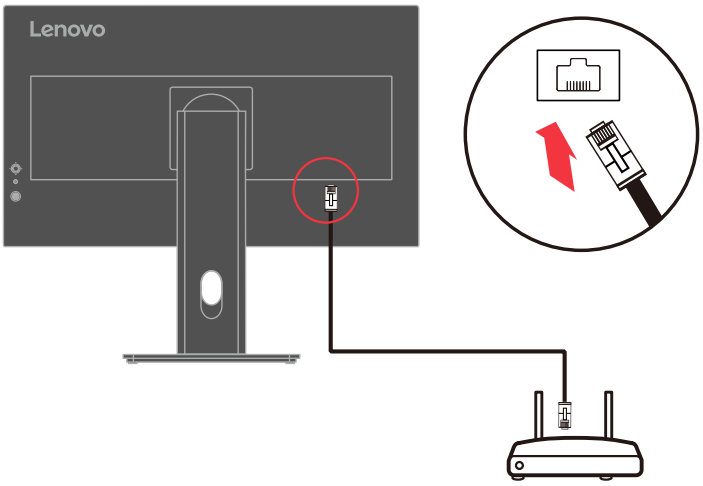

12. Insert the power cord into the monitor, then plug the monitor power cord and the computer cord into grounded electrical outlets.

Note: A certified power supply cord has to be used with this equipment. The relevant national installation and or equipment regulations shall be considered. A certified power supply cord not lighter than ordinary polyvinyl chloride flexible cord according to IEC 60227 (designation H05VV-F 3G 0.75mm^2 or H05VVH2-F2 3G 0.75mm^2) shall be used. Alternative a flexible cord be of synthetic rubber according to IEC 60245 (designation H05RR-F 3G 0.75mm^2) shall be used.

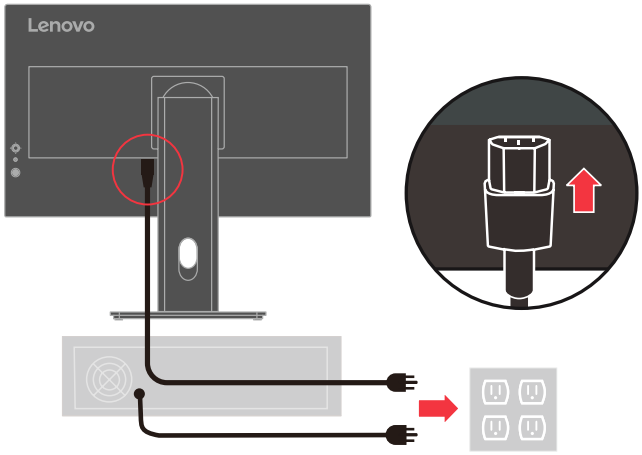

Note: The type of plug & Socket shown here are for illustration only.

13. Connect the cables with cable clip.

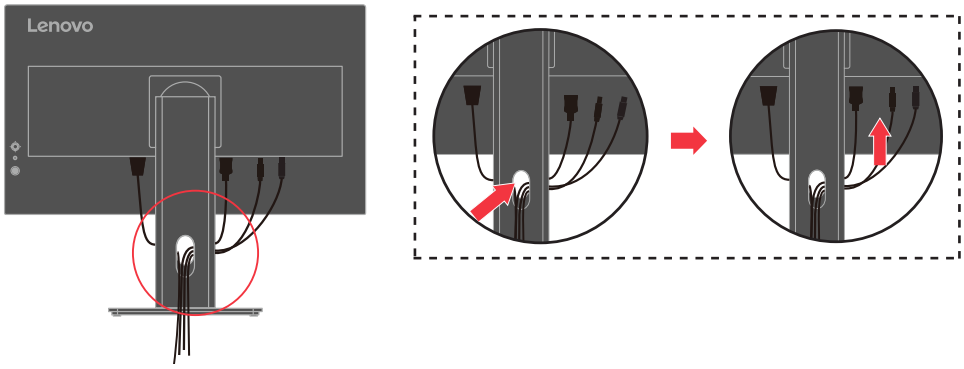

14. Power on the monitor and the computer.

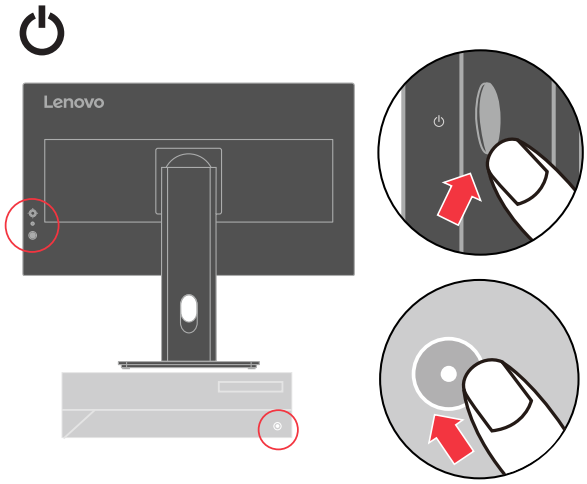

15. When you install the monitor driver, download the driver that corresponds to your monitor model from the Lenovo website https://pcsupport.lenovo.com/solutions/p27ud_40. Refer to the “Manually installing the monitor driver”on page 3-5” section to install the driver.

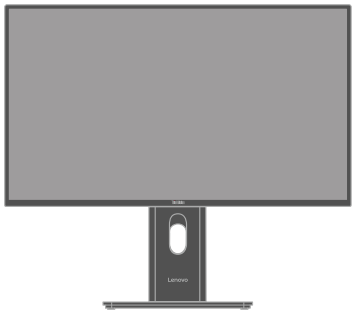

Registering your option

Thank you for purchasing this Lenovo product. Please take a few moments to register your Product and provide us with information that will help Lenovo to better serve you in the future. Your feedback is valuable to us in developing product and services that are important to you, as well as in developing better ways to communicate with you. Register your option on the following Web site: http://www.lenovo.com/register

Lenovo will send you information and updates on your registered product unless you indicate on the Web site questionnaire that you do not want to receive further information.

KVM

KVM Built-In KVM Switch give user to operate two PC which connecting

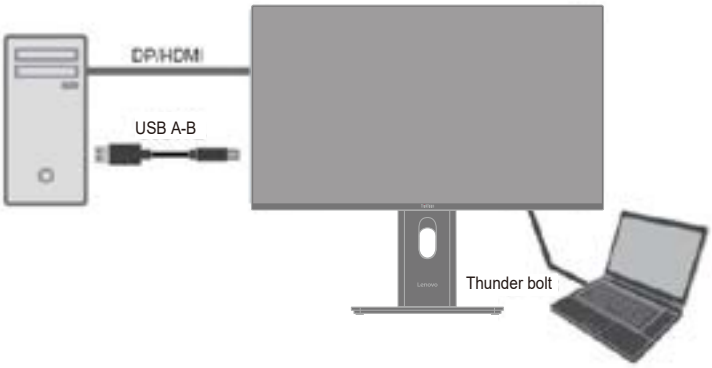

How to enable KVM

The shortcut key of KVM on right direction of five-way key.
The USB devices will be switched to another upstream port after OSD disappears.
Note: KVM operation may cause USB device to be interrupted.

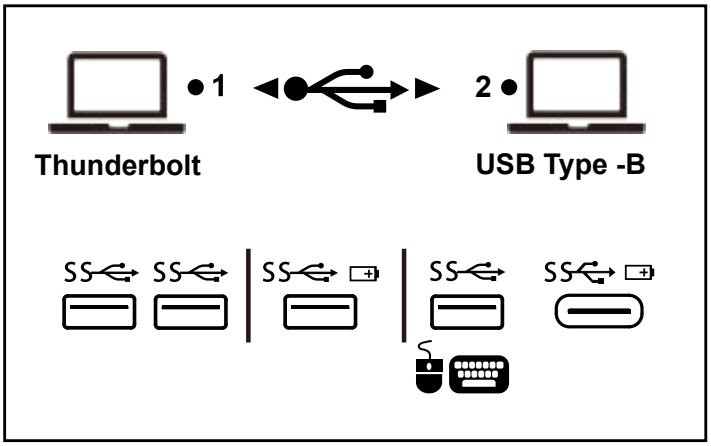

Remarks:
1. Data transmission & Network interruption may happen when user switch source between Thunderbolt™ & USB-B.
2. eKVM functionality may vary depending upon the different brands of the mouse and the keyboard.

DP Power Saving Mode

DP(DisplayPort) Power Saving is a Lenovo-unique feature that uses Panel Replay technology to lower refresh rate (e.g. to 24Hz) to save power

Panel Replay

Panel Replay is an advanced display power-saving technology.
After Panel replay is enabled, under static image condition, the monitor will automatically drop from high refresh rate to low refresh rate , thus achieving power saving effect.

Enable Panel Replay

This feature is applicable when connecting Thunderbolt™ or DisplayPort to the source. Press the Menu key to access the OSD menu, select Advanced settings to access the sub-menu of the next level, and then select the DP power saving mode/Panel replay option to access.

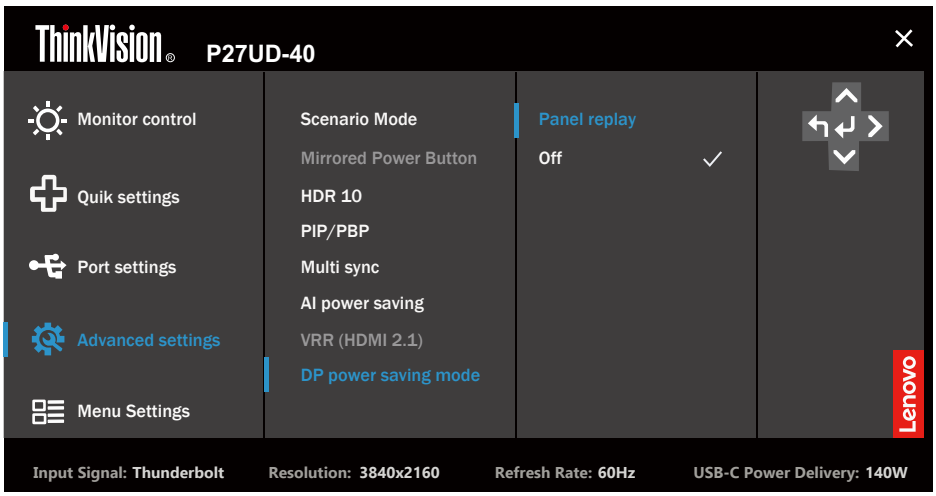

Support PC list

DP Power Saving (Panel Replay) can only be enabled with compatible PCs, please refer to https://pcsupport.lenovo.com for details.

Notes:

DP Power Saving (Panel Replay) is NOT supported when using the following features: PBP (Picture-by-Picture), PIP (Picture-in-Picture) or Daisy Chain. When any of these features are enabled, the Panel Replay function will be grayed out (disabled) in the settings.

Chapter 2. Adjusting and using your monitor

This section will give you information on adjusting and using your monitor.

Comfort and accessibility

Good ergonomic practice is important to get the most from your personal computer and to avoid discomfort. Arrange your workplace and the equipment you use to suit your individual needs and the kind of work that you perform. In addition, use healthy work habits to maximize your performance and comfort while using your computer. For more detailed information on any of these topics, visit the Healthy Computing Web site at: http://www.lenovo.com/healthycomputing/.

Arranging your work area

Use a work surface of appropriate height and available working area to allow you to work in comfort.

Organize your work area to match the way you use materials and equipment. Keep your work area clean and clear for the materials that you typically use and place the items that you use most frequently, such as the computer mouse or telephone, within the easiest reach.

Equipment layout and setup play a large role in your working posture. The following topics describe how to optimize equipment setup to achieve and maintain good working posture.

Positioning your monitor

Position and adjust your computer monitor for comfortable viewing by considering the following items:

- Recommended viewing distance between the eye and the monitor screen is 1.5x the diagonal of the screen. Solutions in meeting this required distance in cramped office situations include pulling desk away from wall or divider to make room for monitor, using flat panel or compact displays placing the monitor in the desk corner, or placing the keyboard in an adjustable drawer to create a deeper working surface.
- **Monitor height:** Position the monitor so your head and neck are in a comfortable and neutral (vertical, or upright) position. If your monitor does not have height adjustments, you might have to place books or other sturdy objects under the base of the monitor to achieve the desired height. A general guideline is to position the monitor such that the top of the screen is at or slightly below your eye-height when you are comfortably seated. However, be sure to optimize your monitor height so the line of site between your eyes and the center the monitor suits your preferences for visual distance and comfortable viewing when your eye muscles are in a relaxed state.
- **Tilt:** Adjust the tilt of your monitor to optimize the appearance of the screen content and to accommodate your preferred head and neck posture.
- **General location:** Position your monitor to avoid glare or reflections on the screen from overhead lighting or nearby windows.

The following are some other tips for comfortable viewing of your monitor:

- Use adequate lighting for the type of work you are performing.
- Use the monitor brightness, contrast, and image adjustment controls, if equipped to optimize the image on your screen to meet your visual preferences.
- Keep your monitor screen clean so you can focus on the screen's contents.

Any concentrated and sustained visual activity can be tiring for your eyes. Be sure to periodically look away from your monitor screen and focus on a far object to allow your eye muscles to relax. If you have questions on eye fatigue or visual discomfort, consult a vision care specialist for advice.

Quick tips for healthy work habits

The following information is a summary of some important factors to consider to help you remain comfortable and productive while you use your computer.

- **Good posture starts with equipment setup:** The layout of your work area and the setup of your computer equipment have a large effect on your posture while using your computer. Be sure to optimize the position and orientation of your equipment by following the tips outlined in "Arranging your work area"on page 2-1 so you can maintain a comfortable and productive posture. Also, be sure to use the adjustment capabilities of your computer components and office furniture to best suit your preferences now and as your preferences change over time.
- **Minor changes in posture can help avoid discomfort:** The longer you sit and work with your computer, the more important it is to observe your working posture. Avoid as suming any one posture for an extended period of time. Periodically make minor modifications in your posture to help deter any discomforts that might arise. Make use of any adjustments that your office furniture or equipment provide to accommodate changes in posture.
- **Short, periodic breaks help ensure healthy computing:** Because computing is primarily a static activity, it is particularly important to take short breaks from your work. Periodically, stand up from your work area, stretch, walk for a drink of water, or otherwise take a short break from using your computer. A short break from work gives your body a welcome change in posture and helps to ensure you remain comfortable and productive while you do work.

Accessibility information

Lenovo is committed to providing greater access to information and technology to people with disabilities. With assistive technologies, users can access information in the way most appropriate to their disability. Some of these technologies are already provided in your operating system; others can be purchased through vendors or accessed at:
https://lenovo.ssbbartgroup.com/lenovo/request_vpat.php

Adjusting your monitor image

This section describes the control features to adjust your monitor image.

Using the direct access controls

The direct access controls can be used when the On Screen Display (OSD) is not displayed.

Table 2-1. Direct access controls

	Icon	Control	Description
1		Center	To access OSD menu Press to confirm selection Press and hold for 10 seconds will lock menu/ unlock menu
		Up	For increasing the value on adjustment bar It is a shortcut key for directly opening Brightness adjustment.
		Down	For decreasing the value on adjustment bar. It is shortcut key for directly opening Scenario mode selection.
		Left	Return to the previous menu page or exit from the previous function.
		Right	Press to enter next level on main menu It is a shortcut key for directly opening KVM selection.
2	1 2	Input Change	Press to switch the video input source while there is no any OSD on the screen. Press and hold for 10 seconds to Enable/Disable the “DDC/CI” .

Using the On-Screen Display (OSD) controls

To adjust the settings, the user controls can be viewed through the OSD.

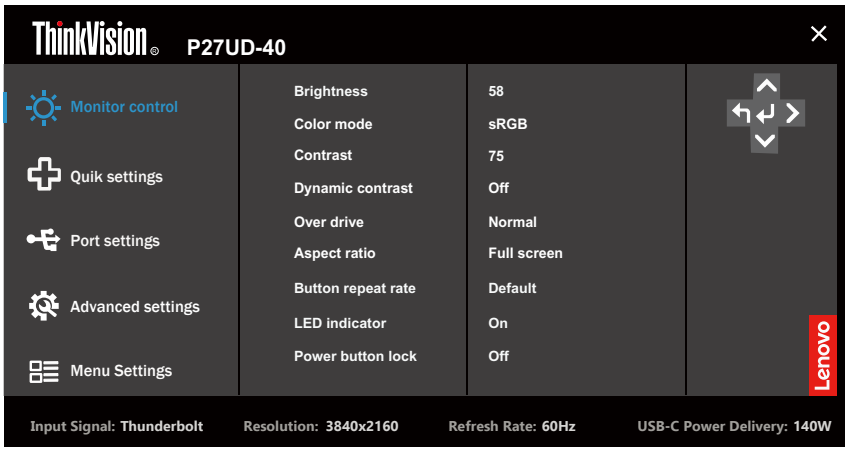

To use the controls:

1. Press ☰ to open the main OSD menu.
2. Use △or ▽ to move among the icons. Select an icon and press ↵ to access that function. If there is a sub-menu, you can move between options using △ or ▽ , then press ↵ to select that function. Use △ or ▽ to make adjustments then Press ↵ to save.
3. Press ↰ to move backwards through the sub-menus and exit from the OSD.
4. Press and hold ↵ for 10 seconds to lock the OSD. This will prevent accidental adjustments to the OSD. Press and hold ↵ for 10 seconds to unlock the OSD and allow adjustments to the OSD.
5. Enables DDC/CI by default. Use OSD Input Source Key, Press and hold 1 ⇄ 2 for 10 seconds to disable / enable DDC/CI function. The words “DDC/CI disable” shows on the screen.
6. The ENERGY STAR option resets all user settings to default values so that the monitor can meet the requirements of Energy Star.

   Energy Star is an energy saving program for consumer electronics led by the U.S. government.It was launched in 1992 by EPA and DOE to reduce energy consumption and greenhouse gas emissions. Energy Star logo is a symbol of energy conservation and environmental protection. It improves the concept of energy efficiency of consumers and manufacturers, and effectively guides the market.

   The regulation of Energy Star improves energy efficiency and reduces air pollution by using more energy-efficient equipment in homes, offices and factories. One way to achieve this goal is to use management to reduce energy consumption when products are not in use.

   The default settings for monitors conform to Energy Star certification. Any changes by users for more features and functionalities may increase power consumption, which will exceed the limitation of Energy Star’s standard. If the user changes the options related to energy efficiency when using, such as brightness, color mode, etc., select All Reset Factory or choose the Energy Star option, the power

consumption will be restored to the energy efficiency with Energy Star standard.

For more information, please refer to (www.energystar.gov/products). All products of Energy Star will be posted online and can be accessed directly by governments, public institutions and consumers

Table 2-2. OSD functions

OSD Icon on Main Menu	Sub menu	Option	Note
Monitor Controls	Brightness	Adjust bar(0-100)	Adjusts the overall brightness.
	Color Mode	sRGB	Select the color mode. Red: Increases or decreases the saturation of 'red' in the image. Green: Increases or decreases the saturation of 'green' in the image. Blue: Increases or decreases the saturation of 'blue' in the image. **Note:** This function will be grayed out and unselectable. When the Scenario mode is set to E-BOOK mode.
		DCI-P3	
		BT.709	
		Neutral	
		Warm	
		Cool	
		Custom	
	Contrast	Adjust bar(0-100)	Adjusts the contrast ratio. **Note:** This function will be grayed out and unavailable in sRGB/DCI-P3/BT.709 mode.
	Dynamic Contrast	On	When enabled, the monitor automatically assesses the overall brightness of the image and restores various color levels by reducing brightness in darker areas. This enhancement produces a clearer and more distinct image. **Note:** 1.When the Dynamic contrast is turn on, Brightness/Contrast/Color mode must be grayed out and cannot be selected. 2.When Dynamic contrast is turn on, HDR remains at the original setting(If the original setting is Auto, DCR will be automatically turn off once the HDR signal comes in).
		Off	
	Over Drive	Off	Over drive improves a monitor's GtG (Grey-to-Grey) response time, a critical metric for assessing the responsiveness of a monitor. A shorter GtG time facilitates quicker screen transitions, resulting in smoother and clearer motion visuals. **Note:** This function will be grayed out and unavailable once the HDR signal comes in.
		Normal	
		Extreme	
	Aspect Ratio	Full Screen	Adjusts the ratio of the horizontal to vertical dimensions of the display image on the monitor, relative to the resolution signal transmitted by the device. **Note:** This function will be grayed out and unavailable when the Panel resolution is a geometric Multiple of the Input signal resolution.
		Orginal AR	
	Button Repeat Rate	Off/Default/Slow	Select the response speed of the button.
	LED Indicator	On/Off	When disabled, the LED remains off when the monitor is powered on.
	Power Button Lock	On/Off	When enabled, the power button is locked to prevent accidental pressing.
Quick settings	Right Key	KVM Brightness Color Mode Contrast Scenario mode Language	Assigns the shortcut keys to user preferences. Options include KVM, Brightness,Color Mode, Contrast, Scenario Mode and Language.
	Up Key		
	Down Key		

OSD Icon on Main Menu	Sub menu	Option	Note
Port Settings	Input Signal	Auto	Selects the input signal.
		Thunderbolt	
		DisplayPort	
		HDMI	
		TBT Priority	
		On	
		Off	
	KVM Setting	USB-B bundle with	KVM Built-In KVM switch give user to operate two PC which connecting. It allows a single video monitor with keyboard and mouse to control multiple computers or servers. “USB-B bundle with” function allows the user to select either DP or HDMI video signal to be bundled with USB-B. When the KVM function switches to USB-B, the video signal will automatically switch to the selected bundled input. “eKVM” function allows for KVM switching through a USB keyboard or USB mouse. When using the keyboard to switch KVM functions, press the left Shift key twice within 0.5 seconds to switch. When using the mouse, press and hold both the left and right mouse buttons simultaneously for 1.5 seconds to switch.
		eKVM	
	USB Always On	On/Off	Please refer to Table 2-3 below for specific details.
	USB Select	USB 2.0	Select either USB 3.0 or USB 2.0. When operating in USB 2.0 mode, the video bandwidth is maximized. However, switching to USB 3.0 mode reduces the effective bandwidth by 50%, which in turn limits the monitor’s maximum supported resolution. **Note:** only work when TBT port connectted in DP Alt mode(normal Type C source)
		USB 3.0	
	USB C Charging	Smart power charging	When enabled, the monitor adaptively adjusts power output according to its load. The output ranges from 100W to 140W.
		Priority USB-C charging	When the priority USB-C charging function is enabled, the maximum output power is 140W.
	DP daisy chain	Auto/On/Off	The Daisy Chain function of monitors allows for the connection of multiple displays in a chain. When this function is enabled, multiple monitors can be managed through a single DisplayPort on the computer.
	Video Range	Auto Full Range 0-255 Limited Range 16-235	The video range refers to the standard color spectrum of a video, specifically the value range of the Y component (brightness component) in a digital video signal. This feature processes the input HDMI signal and is available exclusively via HDMI. **Note:** This function will be grayed out and unselectable When PxP is enabled.
	Ethernet setting	On/Off	When this function is enabled, the PC or laptop connected to the monitor can access the network to which the monitor is connected.
	DP select	DP 1.2 / DP 1.4	Select either DP 1.4 or DP 1.2. **Note:**1. This function will be grayed out and unselectable When PxP/DP daisy chain is enabled or HDR/Panel replay is running.

OSD Icon on Main Menu	Sub menu	Option	Note
Advanced Settings	Scenario Mode	Panel native	Select the scenario mode.
		Image creation	
		Digital cinema	
		Video creation	
		E-Book mode	
	Mirrored Power Button	On/Off	When this function is enabled, the monitor's power button can turn devices connected to the USB-C port on or off. This function works only when a USB-C connection is established, and the connected device must be a Lenovo device that supports VDM (Vendor Defined Messages) . The function is unavailable when the monitor's power button lock is enabled or when in PIP (Picture-in-Picture) or PBP (Picture-by-Picture) mode. The USB Always On function will be activated simultaneously. If USB Always On is toggled from On to Off, the power button will automatically turn off the mirror. If USB Always On is toggled from Off to On, it will not impact the functionality of the power button for the mirror.
	HDR 10	Auto/Off	HDR (High Dynamic Range) provides a visual experience characterized by increased brightness, a broader color spectrum, and enhanced contrast. To fully utilize HDR, one needs an HDR-compatible monitor, graphics card, and playback device, along with content that natively supports HDR. **Note:** When HDR 10 is turned on, Brightness/ Contrast/Dynamic contrast/Scenario mode/Color mode/Over drive/Video Range/PIP/PBP function must be grayed out and cannot be selected.
	PIP/PBP	PIP/PBP	PIP (Picture in Picture) features a single primary screen that displays additional content in a smaller overlay window. PBP (Picture by Picture) divides the screen into distinct sections, each showing a different input source. **Note:** When PIP/PBP is turned on, Dynamic contrast/HDR 10/OSD rotation/Mirrored Power button/Video Range/DP Daisy Chain function must be grayed out and cannot be selected.
		Swap	
		PBP Source	
		PIP Source	
	Muti sync	On/Off	When enabled, this function allows adjustments to brightness, contrast, or color mode on one monitor to be automatically mirrored across all other monitors of the same model in the Daisy chain.
	AI power saving	On/Off	When enabled, the monitor self-adaptively adjusts liquid crystal molecular deflection angles and regulates backlight driving current through per-frame analysis, accomplishing intelligent energy conservation.
	VRR(HDMI2.1)	Auto/Off	VRR (Variable Refresh Rate) , When this function is enabled, the monitor refresh rate will adapt to the source. **Note:** Only available under HDMI 2.1 Source.
	DP power saving mode	Panel replay/Off	After a specified period of inactivity, the monitor automatically reduces its refresh rate to 24Hz to conserve energy.

OSD Icon on Main Menu	Sub menu	Option	Note
Menu Settings	Information	Model Name: P27UD-40	Display the main information of the model.
		Refresh rate 60Hz	
		Firmware: 01	
		Serial Number VN48551	
	Language	English/简体中文/ 繁體中文/日本語/Français/ Italiano/Español/ Deutsch/ Русский/ไทย/ Українська	Change the language of the OSD menu. Note: The selected language only affects the language of the OSD. It has no effect on any software running on the computer.
	OSD Rotation	Normal	Adjust the Rotation of OSD. **Note:** When OSD rotation is turned on, PIP/ PBP function must be grayed out and cannot be selected.
		90	
		180	
		270	
	OSD Position	Adjust bar (0-100,0-100)	Adjust the position of OSD.
	OSD Time Out	Adjust bar(5-115)	Set time of the OSD will remain active after the last time a button is pressed.
	Transparency	Adjust bar(0-100)	Adjust the transparency of OSD.
	Factory Reset	Reset	Resets monitor to the original factory settings. The ENERGY STAR logo indicates resetting all user settings to default values to ensure the monitor can meet Energy Star requirements.
		No	
Input Signal: TBT Resolution:3840 x 2160 Refresh Rate: 60Hz USB-C Power Delivery :140W			
Note: The use of Extreme Mode (response time) may result in reduced display quality when fast moving video graphics are displayed. Users should check Extreme Mode (response time) to verify if it is compatible with any applications they would like to use it with.			

Table 2-3. OSD option “USB always On”

OSD option “USB always On”		**On**		**Off(Default)**	
Upstream status		Connected	Unconnected	Connected	Unconnected
Monitor DC On mode	PowerDelivery(upstream)	Enable	N/A	Enable	N/A
	USB Data(downstream)	Enable	N/A	Enable	N/A
	USB charge(downstream)	Enable	Enable	Enable	Disable
	LAN	Enable	N/A	Enable	N/A
Monitor standby mode	Power Delivery(upstream)	Enable	N/A	Enable	N/A
	USB Data(downstream)	Enable	N/A	Enable	N/A
	USB charge(downstream)	Enable	Enable	Enable	Disable
	LAN	Enable	N/A	Enable	N/A
Monitor DC Off mode	Power Delivery(upstream)	Enable	N/A	Disable	N/A
	USB Data(downstream)	Enable	N/A	Disable	N/A
	USB charge(downstream)	Enable	Enable	Disable	Disable
	LAN	Enable	N/A	Disable	N/A

Selecting a supported display mode

The display mode of the monitor uses is controlled by the computer. Therefore, refer to your computer documentation for details on how to change display modes.

The image size, position and shape might be changed when the display mode changes. This is normal and the image can be re-adjusted using automatic image setup and the image controls.

Unlike CRT monitors, which require a high refresh rate to minimize flicker, LCD or Flat Panel technology is inherently flicker-free.

The monitor adopts Flicker-Free technology, which clears the eye visible flicker , brings comfort viewing experience and preventing users suffer from eye strain and fatigue.

Note: If your system has previously been used with a CRT monitor and is currently configured to a display mode outside the range of this monitor, you may need to reattach the CRT monitor temporarily until you have re-configured the system; preferably to 3840 x 2160 at 60 Hz, which is a common display mode.

The display modes shown below have been optimized at the factory.

Table 2-4. Factory set display modes

Timing	Refresh rate(Hz)
640x480	60 Hz, 67 Hz, 72 Hz, 75 Hz
720x400	70 Hz
800x600	60 Hz, 72 Hz, 75 Hz
832x624	75 Hz
1024x768	60 Hz, 70Hz, 75 Hz
1280 x 720	60 Hz
1280 x 800	60 Hz
1280x1024	60 Hz, 75 Hz
1440x900	60 Hz
1600x900	60 Hz
1680x1050	60 Hz
1920x1080	60 Hz, 75 Hz
1920 x 1200	60 Hz
2560×1440	60 Hz, 120 Hz
3840 x 2160	24 Hz, 30 Hz, 48 Hz, 60 Hz, 100 Hz, 120 Hz

Understanding power management

Power management is invoked when the computer recognizes that you have not used your mouse or keyboard for a user-definable period. There are several states as described in the table below.

For optimal performance, switch off your monitor at the end of each working day, or whenever you expect to leave it unused for long periods during the day.

Table 2-5. Power indicator

State	Power Indicator	Screen	Restoring Operation	Compliance
On	White	Normal		
Standby/Suspend	Amber	Blank	Press a key or move the mouse There may be a slight delay before the image reappears. **Note:** Standby also occurs if there is no image output to the monitor.	ENERGY STAR
Off	Off	Blank	Press the power button There may be a slight delay before the image reappears.	ENERGY STAR

Power Management Modes

VESA Modes	Horizontal Sync	Vertical Sync	Video	Power Indicator	Power Consumption
Normal operation	Active	Active	Active	White	<226 W (maximum)* <19 W (typical)
Active-off mode	Inactive	Inactive	Off	Amber	Less than 0.5 W
Switch off	-	-	-	Off	Less than 0.3 W

Energy Star	Power Consumption
P_{ON}	17.30 W
E_{TEC}	55.15 kWh

***Maximum power consumption with max luminance.**

This document is informational only and reflects laboratory performance. Your product may perform differently, depending on the software, components and peripherals you ordered and shall have no obligation to update such information. Accordingly, the customer should not rely upon this information in making decisions about electrical tolerances or otherwise. No warranty as to accuracy or completeness is expressed or implied.

Caring for your monitor

Be sure to turn off the power before you perform any maintenance on the monitor.

Do not:

- Apply water or liquid directly to your monitor.
- Use solvents or abrasives.
- Use flammable cleaning materials to clean your monitor or any other electrical equipment.
- Touch the screen area of your monitor with sharp or abrasive items. This type of contact may cause permanent damage to your screen.
- Use any cleaner which contains an anti-static solution or similar additives. This may harm the coating of the screen area.

Do:

- Lightly dampen a soft cloth with water and use this to gently wipe the covers and the screen.
- Remove grease or finger marks with a damp cloth and a little mild detergent.

Detaching the monitor base and stand

Step 1: Place the monitor on a soft and flat surface.

Step 2: Remove the base and stand from the monitor.

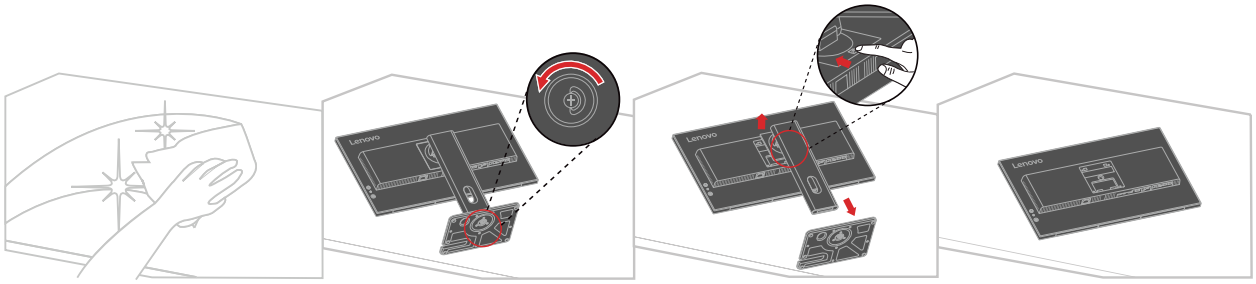

Wall Mounting (Optional)

Refer to the instructions that come with the base mounting kit. To convert your LCD display from a desk-mounted to a wall-mounted display, do the following:

Step 1: Verify that the Power button is turned Off, then disconnect the power cord.

Step 2: Lay the LCD display face down on a towel or blanket.

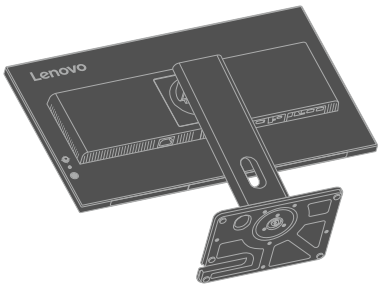

Step 3: Remove the base from the monitor, refer to 2-13 “Detaching the monitor base and stand” .

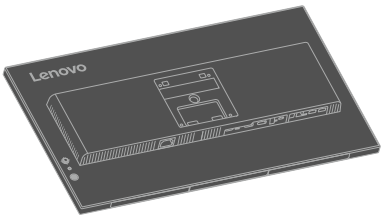

Step 4: Attach the mounting bracket from the VESA compatible wall mounting kit. (100mm x100mm distance), VESA Mounting Screw is M4 x 10 mm.

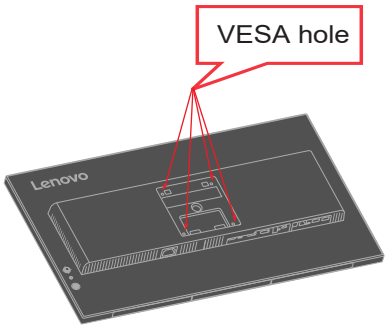

Step 5: Attach the LCD display to the wall, follow the instructions in the wall-mounting kit.

Note: For use only with UL or CSA or GS-listed wall mount bracket with minimum weight/load bearing capacity of 13.5 kg(29.8 lbs).

Chapter 3. Reference information

This section contains monitor specifications, instructions to manually install the monitor driver, troubleshooting information and service information..

Monitor specifications

Table 3-1. Monitor specifications for type-model 64CEGAR2WW

Dimensions	Depth Height Width	195.0 mm (7.68 inch) 539.1 mm (21.22 inch) 613.4 mm (24.15 inch)
Stand	Lift Tilt Swivel Pivot	155 mm -5° to 23.5° -45° to 45° -90° to 90°
Weight	Weight with stand assembly	6.8 kg (15.0 lbs)
	Weight without stand assembly (For wall mount or VESA mount considerations - no cables)	4.5 kg (9.9 lbs)
VESA mount	Supported	100 mm x 100 mm (3.94 inch x 3.94 inch)
Image	Viewable image size Maximum height Maximum width Pixel pitch	685.8 mm (27 inch) 335.7 mm (13.22 inch) 596.7 mm (23.49 inch) 0.1554 mm (0.0061 inch)
Power input	Supply voltage Max supply current	100-240V AC 50-60Hz 2.8 A
Power consumption **Note:** Power consumption figures are for the monitor and the power supply combined	Normal operation Standby/Suspend Off	<226 W (maximum) <19 W (typical) <0.5 W <0.3 W
Video input (DP)	Interface Horizontal addressability Vertical addressability Clock frequency	DP 3840 pixels (max) 2160 lines (max) 1200 MHz
Video input (HDMI)	Interface Horizontal addressability Vertical addressability Clock frequency	HDMI 3840 pixels (max) 2160 lines (max) 1200 MHz

Table 3-1. Monitor specifications for type-model 64CEGAR2WW

Video input (TBT4)	Interface Horizontal addressability Vertical addressability Clock frequency	TBT4 3840 pixels (max) 2160 lines (max) 1200 MHz
Communications	VESA DDC	CI
Supported Display Modes	Horizontal frequency Vertical frequency	30 kHz-255 KHz 24 Hz-120 Hz
	Native Resolution	3840 x 2160 at 60 Hz
Temperature	Operating Storage Shipping	0° to 40° C (32° to 104° F) -20° to 60° C (-4° to 140° F) -20° to 60° C (-4° to 140° F)
Humidity	Operating Storage Shipping	8% to 80% non-condensing 5% to 95% non-condensing 5% to 95% non-condensing

Troubleshooting

If you have a problem setting up or using your monitor, you might be able to solve it yourself. Before calling your dealer or Lenovo, try the suggested actions that are appropriate to your problem.

Table 3-2. Troubleshooting

Problem	Possible cause	Suggested action	Reference
The words “Input not supported” are shown on the screen, and the power indicator is flashing white.	The system is set to a display mode which is not supported by the monitor.	If you are replacing an old monitor, reconnect it and adjust the display mode to within the specified range for your new monitor. If using a Windows system, restart the system in safe mode, then select a supported display mode for your computer. If these options do not work, contact the Customer Support Center.	“Selecting a supported display mode”on page 2-11
The image quality is unacceptable.	The video signal cable is not connected with the monitor or system completely.	Be sure the signal cable is firmly plugged into the system and monitor.	“Connecting and turning on your monitor”on page 1-5
	The color settings may be incorrect.	Select another color setting from the OSD menu.	“Adjusting your monitor image”on page 2-3
The power indicator is not lit and there is no image.	• The monitor’s power switch is not switched on. • The power cord is loose or disconnected. • There is no power at the outlet.	• Be sure the power cord is connected properly. • Be sure the outlet has power. • Power on the monitor. • Try using another power cord. • Try using another electrical outlet.	“Connecting and turning on your monitor”on page 1-5
Screen is blank and power indicator is amber.	The monitor is in Standby / Suspend mode.	• Press any key on the keyboard or move the mouse to restore operation. • Check the Power Options settings on your computer.	“Understanding power management”on page 2-12

Table 3-2. Troubleshooting

Problem	Possible cause	Suggested action	Reference
The power indicator is amber, but there is no image.	The video signal cable is loose or disconnected from the system or monitor.	Be sure the video cable is connected with the system properly.	“Connecting and turning on your monitor”on page 1-5
	The monitor brightness and contrast are at the lowest setting.	Adjust the brightness and contrast setting on the OSD menu.	“Adjusting your monitor image”on page 2-3
One or more of the pixels appear discolored.	This is a characteristic of the LCD technology and is not an LCD defect.	If there are more than five pixels missing, contact the Support Center.	Appendix A.”Service and Support”on page A-1
• Fuzzy lines in text or a blurry image. • Horizontal or vertical lines through the image.	• Image setup has not been optimized. • Your system Display Properties setting have not been optimized.	Adjust the resolution settings on your system to match the native resolution for this monitor: 3840 x 2160 at 60 Hz.	“Adjusting your monitor image”on page 2-3
		Perform automatic image setup. If automatic image setup does not help, perform manual image setup.	“Selecting a supported display mode”on page 2-11
		When working in the native resolution, you may find additional improvements by adjusting the Dots Per Inch (DPI) setting on your system.	See the Advanced section of your system’s display properties.

Manually installing the monitor driver

Below are steps for manually installing the monitor driver in Microsoft Windows 10, Microsoft Windows 11.

1. Turn off the computer, all attached devices.
2. Ensure that the monitor is connected correctly.
3. Turn on the monitor and then the system unit. Allow your computer to start the Windows operating system.
4. From the Lenovo website https://pcsupport.lenovo.com/solutions p27ud_40, find the corresponding monitor driver and download it to a PC to which this monitor is connected (such as a desktop).
5. Right-click the Windows **Start** button on the desktop, then click **Device Manager**, and double click **Monitor**.
6. Double-click **Generic Monitor**.
7. Click the **Driver** tab.
8. Click **Update Driver**, and then click **Browse Computer to find the driver**.
9. Click **Let me pick from a list of available divers on my computer**.
10. Click the **Have Disk...** button. By clicking the **Browse** button, browse and point to the following path: **X:\Monitor Drivers\Windows** (where X indicates “the folder in which the downloaded driver is located” (such as a desktop)).
11. Select **P27UD-40.inf** file, Click **Open** button. Click **OK** button.
12. In the new window, select **P27UD-40** and click **Next**.
13. After the installation is complete, delete all downloaded files and close all Windows.
14. Restart the system. The system will automatically select the refresh rate and the corresponding color matching profile.

Note: On LCD monitors, unlike CRTs, a faster refresh rate does not improve display quality. Lenovo recommends using either 3840 x 2160 at a refresh rate of 60 Hz, or 640 x 480 at a refresh rate of 60 Hz.

Getting further help

If you still can’t solve your problem, please contact the Lenovo Support Center. For more information on contacting the Support Center, please see Appendix A.”Service and Support”on page A-1

Customer responsibilities

The warranty does not apply to a product which has been damaged due to accident, misuse, abuse, improper installation, usage not in accordance with product specifications and instructions, natural or personal disaster, or unauthorized alterations, repairs or modifications.

The following are examples of misuse or abuse and not covered by warranty:

- Images burned on to the screen of a CRT monitor. Burned image is preventable by utilizing a moving screen saver or power management.
- Physical damage to covers, bezel, base and cables.
- Scratches or punctures on monitor screens.
- The monitor is not designed for 24/7 operation.Continuous use will accelerate aging and may prevent it from reaching its designed lifespan.

Service parts

The following parts are for use by Lenovo service, or Lenovo aurthorized dealers, to support the customer warranty. Parts are for service use only. The table below shows information for model 64CEGAR2WW.

Table 3-3. List of service parts

FRU (FIELD REPLACEABLE UNIT) PART NUMBER	DESCRIPTION	Machine Type/ Model (MTM)	COLOR
5C11J37844	DP1.4 cable 1.8m FRU--Wistron	64CE	Raven Black
5C11P37210	HDMI2.1 cable 1.8m FRU--Wistron	64CE	Raven Black
5C11P37228	USB Type-A to B cable 1.8m-Wistron	64CE	Raven Black
5C11P37267	TBT4 cable 1m FRU--Wistron	64CE	Raven Black
5CF1S60201	P27UD-40 - 27 inch FRU Carton	64CE	Yellow
5D11P36279	P27UD-40 - 27 inch FRU Monitor	64CE	Raven Black
5SE1P38284	P27UD-40 - FRU Stand and Base	64CE	Raven Black

Appendix A. Service and Support

The following information describes the technical support that is available for your product, during the warranty period or throughout the life of your product. Refer to the Lenovo Limited Warranty for a full explanation of Lenovo warranty terms.

Registering your option

Register to receive product service and support updates, as well as free and discounted computer accessories and content. Go to: http://www.lenovo.com/register

Online technical support

Online technical support is available during the lifetime of a product at: http://www.lenovo.com/support

Product replacement assistance or exchange of defective components also is available during the warranty period. In addition, if your option is installed in a Lenovo computer, you might be entitled to service at your location. A Lenovo technical support representative can help you determine the best alternative.

Quebec Disclaimer

Quebec Disclaimer: English

IMPORTANT NOTICE FOR QUEBEC CONSUMERS:

In regard to section 79.18 of Quebec's Regulation respecting the application of the Consumer Protection Act, Lenovo in no way guarantees the availability of (a) replacement parts; (b) repair services; and (c) information necessary to maintain or repair the goods. For up-to-date information on the technical support and parts available for your purchase, please consult https://support.lenovo.com/ca/en

Quebec Disclaimer: Canadian French

AVIS IMPORTANT POUR LES CONSOMMATEURS DU QUÉBEC:

En ce qui concerne l'article 79.18 du Règlement d'application de la Loi sur la protection du consommateur du Québec, Lenovo ne garantit en aucune façon la disponibilité des éléments suivants :(a) les pièces de rechange; (b) les services de réparation; et (c) les renseignements nécessaires à l'entretien à la réparation du bien. Pour obtenir des renseignements à jour sur le soutien technique et les pièces disponibles pour votre achat, veuillez consulter https://support.lenovo.com/ca/fr.

Telephone technical support

Installation and configuration support through the Customer Support Center will be available until 90 days after the option has been withdrawn from marketing. After that time, the support is cancelled, or made available for a fee, at Lenovo's discretion. Additional support is also available for a nominal fee.

Before contacting a Lenovo technical support representative, please have the following information available: option name and number, proof of purchase, computer manufacturer, model, serial number and manual, the exact wording of any error message, description of the problem, and the hardware and software configuration information for your system.

Your technical support representative might want to walk you through the problem while you are at your computer during the call.

Telephone numbers are subject to change without notice. The most up-to-date telephone list for Lenovo Support is always available at: http://consumersupport.lenovo.com

Country or Region	Telephone Number
Argentina	0800-666-0011 (Spanish, English)
Australia	1-800-041-267 (English)
Austria	0810-100-654 (For local rate) (German)
Belgium	Warranty service and support: 02-339-36-11 (Dutch, French)
Bolivia	0800-10-0189 (Spanish)
Brazil	Calls made from within the Sao Paulo region: 11-3889-8986 Calls made from outside the Sao Paulo region: 0800-701-4815 (Portuguese)
Brunei Darussalam	Dial 800-1111 (English)
Canada	1-800-565-3344 (English, French)
Chile	800-361-213 (Spanish)
China	Technical Support Line: 400-990-8888 (Mandarin)
China (Hong Kong S.A.R.)	(852) 3516-8977 (Cantonese, English, Mandarin)
China (Macau S.A.R.)	0800-807 / (852) 3071-3559 (Cantonese, English, Mandarin)
Colombia	1-800-912-3021 (Spanish)
Costa Rica	0-800-011-1029 (Spanish)
Croatia	385-1-3033-120 (Croatian)
Cyprus	800-92537 (Greek)
Czech Republic	800-353-637 (Czech)
Denmark	Warranty service and support: 7010-5150 (Danish)

Country or Region	Telephone Number
Dominican Republic	1-866-434-2080 (Spanish)
Ecuador	1-800-426911-OPCION 4 (Spanish)
Egypt	Primary: 0800-0000-850 Secondary: 0800-0000-744 (Arabic,English)
El Salvador	800-6264 (Spanish)
Estonia	372-66-0-800 (Estonian, Russian, English)
Finland	Warranty service and support: +358-800-1-4260 (Finnish)
France	Warranty service and support: 0810-631-213 (hardware) (French)
Germany	Warranty service and support: 0800-500-4618 (toll-free) (German)
Greece	Lenovo Business Partner (Greek)
Guatemala	Dial 999-9190, wait for operator, and request to reach 877-404-9661 (Spanish)
Honduras	Dial 800-0123 (Spanish)
Hungary	+36-13-825-716 (English, Hungarian)
India	Primary: 1800-419-4666 (Tata) Secondary: 1800-3000-8465 (Reliance) Email: commercialts@lenovo.com (English and Hindi)
Indonesia	1-803-442-425 62 213-002-1090 (Standard Charges Apply) (English, Bahasa Indonesia)
Ireland	Warranty service and support: 01-881-1444 (English)
Israel	Givat Shmuel Service Center: +972-3-531-3900 (Hebrew, English)
Italy	Warranty service and support: +39-800-820094 (Italian)
Japan	0120-000-817 (Japanese, English)
Kazakhstan	77-273-231-427 (Standard Charges Apply) (Russian, English)
Korea	1670-0088 (Collect call) 02-3483-2829 (Toll Call) (Korean)

Country or Region	Telephone Number
Latvia	371-6707-360 (Latvian, Russian, English)
Lithuania	370 5278 6602 (Italian, Russian, English)
Luxembourg	ThinkServer and ThinkStation: 352-360-385-343 ThinkCentre and ThinkPad: 352-360-385-222 (French)
Malaysia	1-800-88-0013 03-7724-8023 (Standard Charges Apply) (English)
Malta	356-21-445-566 (English, Italian, Maltese Arabic)
Mexico	001-866-434-2080 (Spanish)
Netherlands	020-513-3939 (Dutch)
New Zealand	0508-770-506 (English)
Nicaragua	001-800-220-2282 (Spanish)
Norway	8152-1550 (Norwegian)
Panama	Lenovo Customer Support Center: 001-866-434 (toll-free) (Spanish)
Peru	0-800-50-866 OPCION 2 (Spanish)
Philippines	1-800-8908-6454 (GLOBE subscribers) 1-800-1441-0719 (PLDT subscribers) (Tagalog, English)
Poland	Laptops and tablets branded with logo Think: 48-22-273-9777 ThinkStation and ThinkServer: 48-22-878-6999 (Polish, English)
Portugal	808-225-115 (Standard Charges Apply) (Portuguese)
Romania	4-021-224-4015 (Romanian)
Russia	+7-499-705-6204 +7-495-240-8558 (Standard Charges Apply) (Russian)
Singapore	1-800-415-5529 6818-5315 (Standard Charges Apply) (English, Mandarin, Bahasa Malaysia)
Slovakia	ThinkStation and ThinkServer: 421-2-4954-5555
Slovenia	386-1-2005-60 (Slovenian)

Country or Region	Telephone Number
Spain	34-917-147-833 (Spanish)
Sri Lanka	9477-7357-123 (Sumathi Information systems) (English)
Sweden	Warranty service and support: 077-117-1040 (Swedish)
Switzerland	Warranty service and support: 0800-55-54-54 (German, French, Italian)
Taiwan	0800-000-702 (Mandarin)
Thailand	001-800-4415-734 (+662) 787-3067 (Standard Charges Apply) (Thai, English)
Turkiye	0 212 912 01 34 (Turkish)
United Kingdom	Standard warranty support: 03705-500-900 (local rate) Standard warranty support: 08705-500-900 (English)
United States	1-800-426-7378 (English)
Uruguay	000-411-005-6649 (Spanish)
Venezuela	0-800-100-2011 (Spanish)
Vietnam	120-11072 (Toll Free) 84-8-4458-1042 (Standard Charges Apply) (Vietnamese, English)

Appendix B. Notices

Lenovo may not offer the products, services, or features discussed in this document in all countries. Consult your local Lenovo representative for information on the products and services currently available in your area. Any reference to a Lenovo product, program, or service is not intended to state or imply that only that Lenovo product, program, or service may be used. Any functionally equivalent product, program, or service that does not infringe any Lenovo intellectual property right may be used instead.
However, it is the user ‘s responsibility to evaluate and verify the operation of any other product, program, or service.

Lenovo may have patents or pending patent applications covering subject matter described in this document. The furnishing of this document does not give you any license to these patents. You can send license inquiries, in writing, to:

Lenovo (United States), Inc.
1009 Think Place - Building One
Morrisville, NC 27560
U.S.A.
Attention: Lenovo Director of Licensing

LENOVO PROVIDES THIS PUBLICATION “AS IS” WITHOUT WARRANTY OF ANY KIND, EITHER EXPRESS OR IMPLIED, INCLUDING, BUT NOT LIMITED TO, THE IMPLIED WARRANTIES OF NON-INFRINGEMENT, MERCHANTABILITY OR FITNESS FOR A PARTICULAR PURPOSE. Some jurisdictions do not allow disclaimer of express or implied warranties in certain transactions, therefore, this statement may not apply to you.

This information could include technical inaccuracies or typographical errors. Changes are periodically made to the information herein; these changes will be incorporated in new editions of the publication. Lenovo may make improvements and/or changes in the product(s) and/or the program(s) described in this publication at any time without notice.

The products described in this document are not intended for use in implantation or other life support applications where malfunction may result in injury or death to persons. The information contained in this document does not affect or change Lenovo product specifications or warranties. Nothing in this document shall operate as an express or implied license or indemnity under the intellectual property rights of Lenovo or third parties. All information contained in this document was obtained in specific environments and is presented as an illustration. The result obtained in other operating environments may vary.

Lenovo may use or distribute any of the information you supply in any way it believes appropriate without incurring any obligation to you.

Any references in this publication to non-Lenovo Web sites are provided for convenience only and do not in any manner serve as an endorsement of those Web sites. The materials at those Web sites are not part of the materials for this Lenovo product, and use of those Web sites is at your own risk.

Any performance data contained herein was determined in a controlled environment. Therefore, the result obtained in other operating environments may vary significantly. Some measurements may have been made on development-level systems and there is no guarantee that these measurements will be the same on generally available

systems. Furthermore, some measurements may have been estimated through extrapolation. Actual results may vary. Users of this document should verify the applicable data for their specific environment.

Recycling information

Lenovo encourages owners of information technology (IT) equipment to responsibly recycle their equipment when it is no longer needed. Lenovo offers a variety of programs and services to assist equipment owners in recycling their IT products. For information on recycling Lenovo products, go to:

http://www.lenovo.com/recycling

環境配慮に関して

本機器またはモニターの回収リサイクルについて

企業のお客様が、本機器が使用済みとなり廃棄される場合は、資源有効利用促進法の規定により、産業廃棄物として、地域を管轄する県知事あるいは、政令市長の許可を持った産業廃棄物処理業者に適正処理を委託する必要があります。また、弊社では資源有効利用促進法に基づき使用済みパソコンの回収および再利用・再資源化を行う「PC 回収リサイクル・サービス」を提供しています。詳細は、
https://www.lenovo.com/jp/ja/services_warranty/recycle/pcrecycle/
をご参照ください。

また、同法により、家庭で使用済みとなったパソコンのメーカー等による回収再資源化が 2003 年 10 月 1 日よりスタートしました。詳細は、
https://www.lenovo.com/jp/ja/services_warranty/recycle/pcrecycle/
をご参照ください。

重金属を含む内部部品の廃棄処理について

本機器のプリント基板等には微量の重金属（鉛など）が使用されています。使用後は適切な処理を行うため、上記「本機器またはモニターの回収リサイクルについて」に従って廃棄してください。

Collecting and recycling a disused Lenovo computer or monitor

If you are a company employee and need to dispose of a Lenovo computer or monitor that is the property of the company, you must do so in accordance with the Law for Promotion of Effective Utilization of Resources. Computers and monitors are categorized as industrial waste and should be properly disposed of by an industrial waste disposal contractor certified by a local government. In accordance with the Law for Promotion of Effective Utilization of Resources, Lenovo Japan provides, through its PC Collecting and Recycling Services, for the collecting, reuse, and recycling of disused computers and monitors. For details, visit the Lenovo Web site at https://www.lenovo.com/jp/ja/services_warranty/recycle/pcrecycle/. Pursuant to the Law for Promotion of Effective Utilization of Resources, the collecting and recycling of home-used computers and monitors by the manufacturer was begun on October 1, 2003. This service is provided free of charge for home-used computers sold after October 1, 2003. For details, visit the Lenovo Web site at https://www.lenovo.com/jp/ja/services_warranty/recycle/personal/.

Disposing of Lenovo computer components

Some Lenovo computer products sold in Japan may have components that contain heavy metals or other environmental sensitive substances. To properly dispose of disused components, such as a printed circuit board or drive, use the methods described above for collecting and recycling a disused computer or monitor.

Trademarks

The following terms are trademarks of Lenovo in the United States, other countries, or both:

Lenovo
The Lenovo logo
ThinkCenter
ThinkPad
ThinkVision

Microsoft, Windows, and Windows NT are trademarks of the Microsoft group of companies.
Other company, product, or service names may be trademarks or service marks of others.

Power cords and power adapters

Use only the power cords and power adapters supplied by the product manufacturer, Do not use the ac power cord for other devices.