Dell Pro Heavy Duty Single Monitor Arm HDA26

Range of Motion

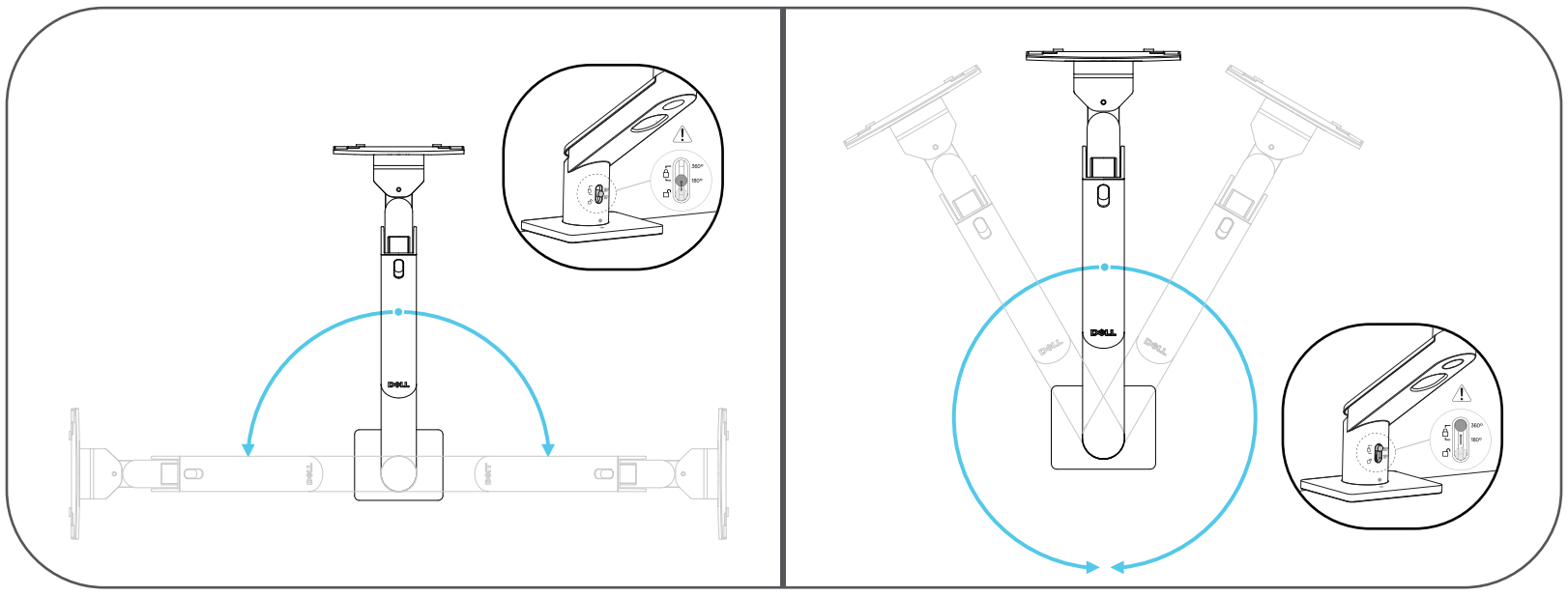

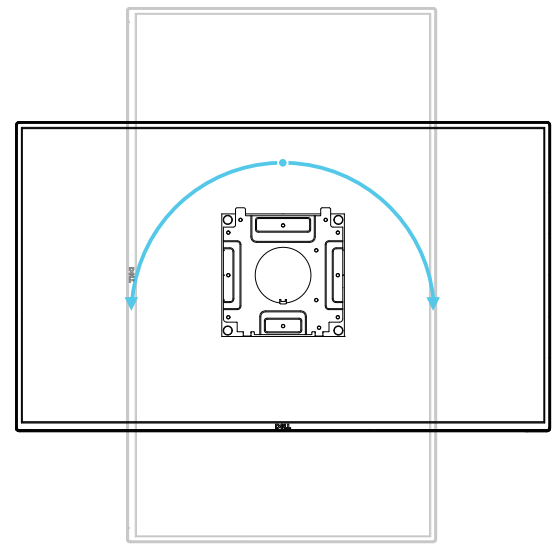

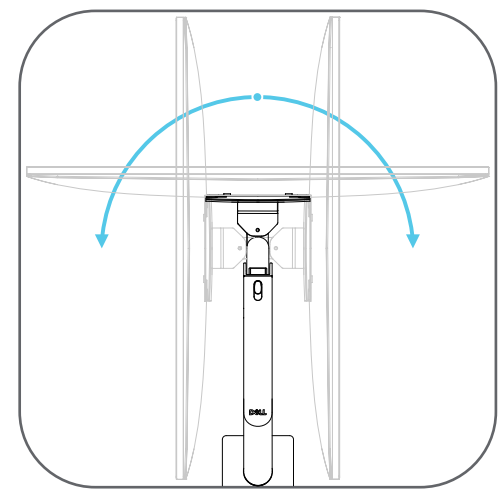

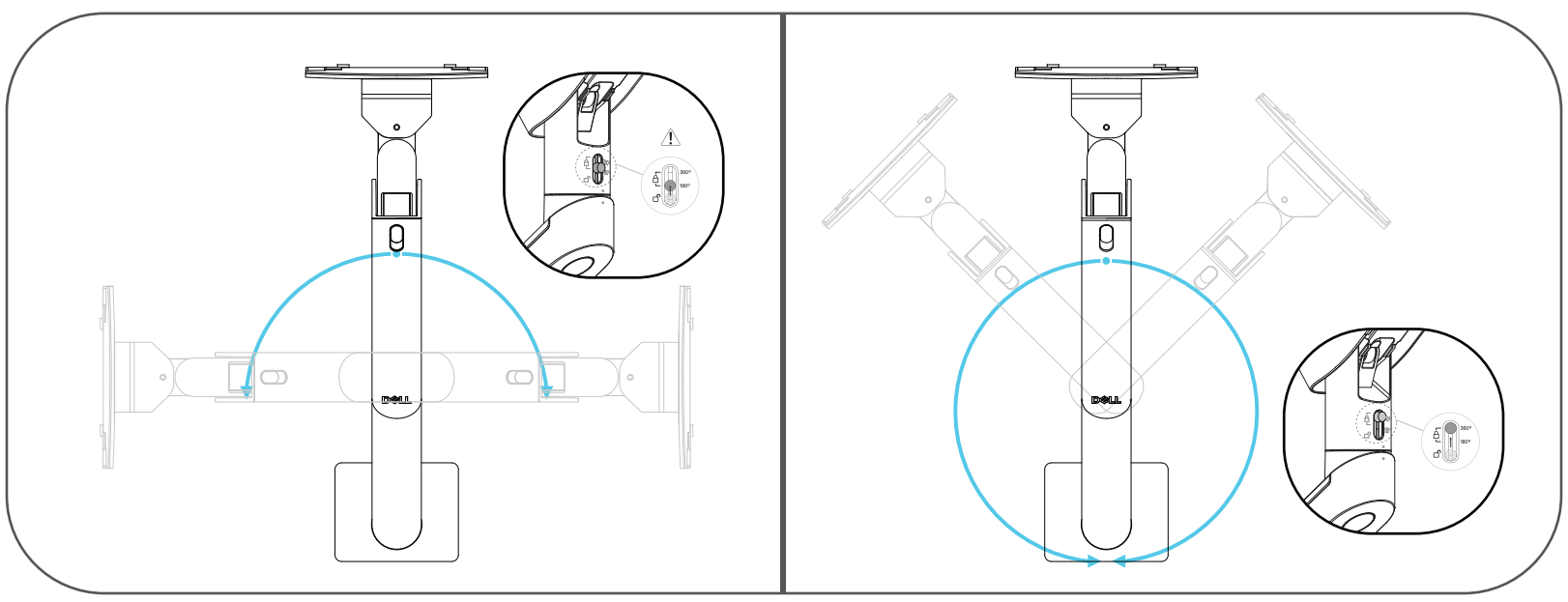

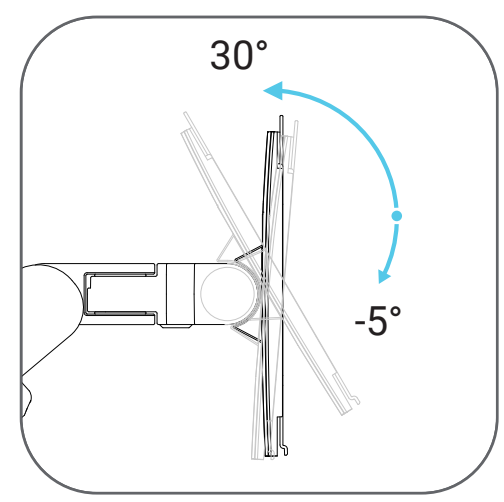

Dimensions

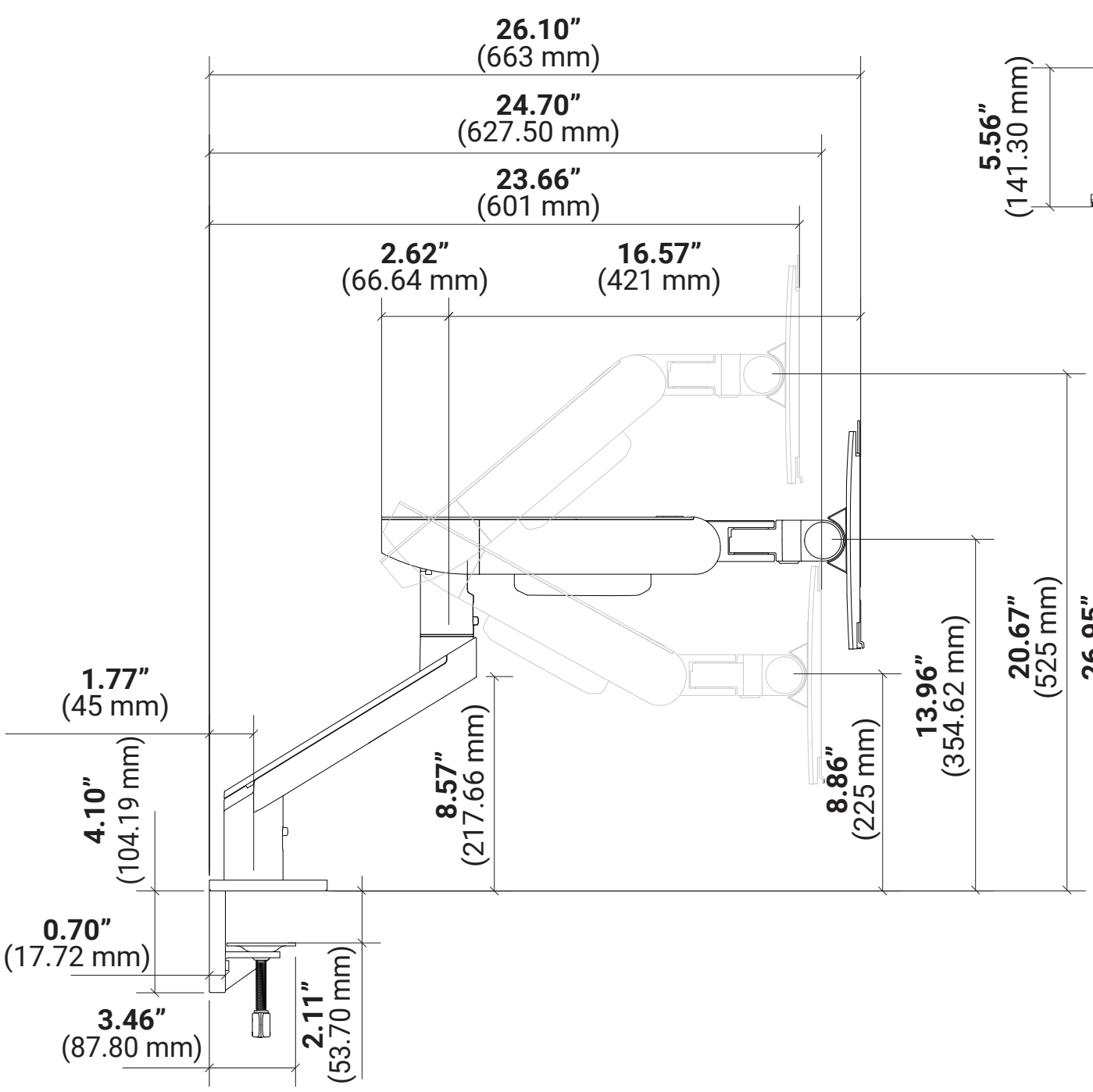

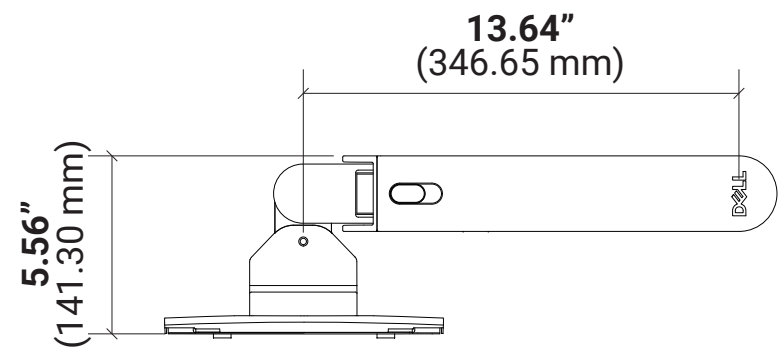

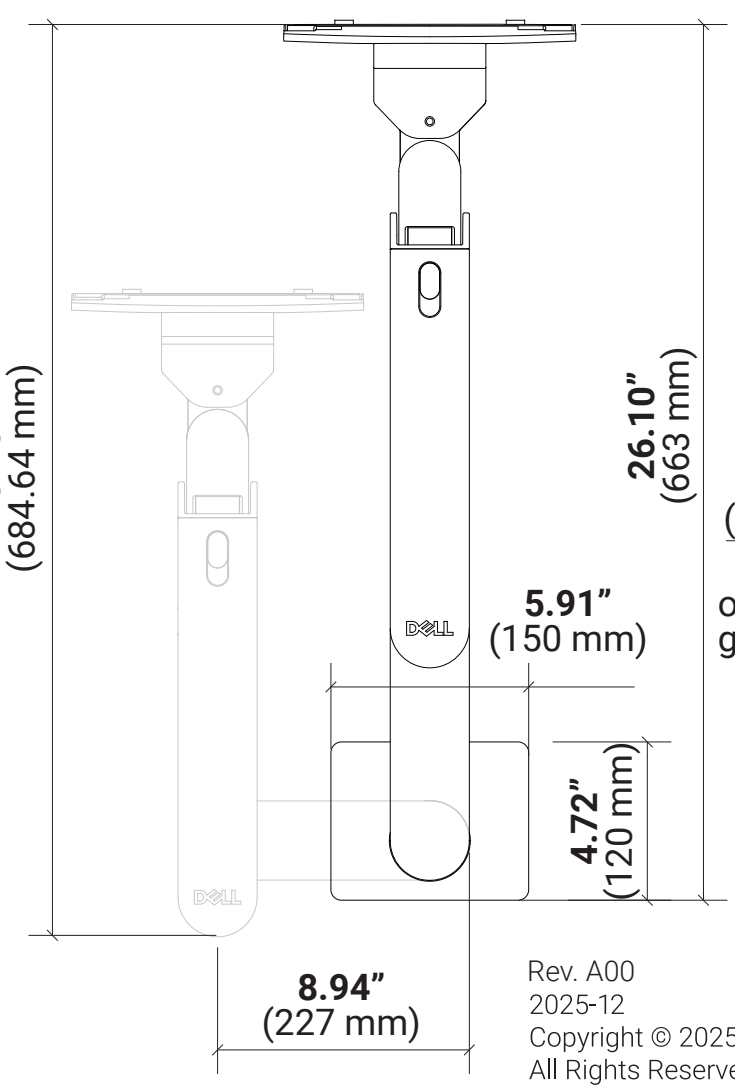

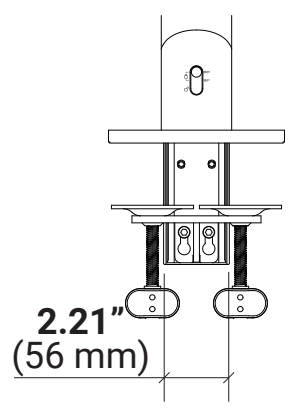

or **2.01”** (51 mm) for grommet hole

Rev. A00
2025-12
Copyright © 2025 Dell Inc. or its subsidiaries.
All Rights Reserved.